SECTION MTC
MANUAL AIR CONDITIONER

CONTENTS

PRECAUTIONS 4
Precautions for Supplemental Restraint System (SRS) “AIR BAG” and “SEAT BELT PRE-TENSIONER” 4
Precautions for Working with HFC-134a (R-134a) 4
CONTAMINATED REFRIGERANT 5
General Refrigerant Precautions 5
Lubricant Precautions 5
Precautions for Refrigerant Connection 6
FEATURES OF NEW TYPE REFRIGERANT CONNECTION 6
O-RING AND REFRIGERANT CONNECTION 7
Precautions for Servicing Compressor 9
Precautions for Service Equipment 9
RECOVERY/RECYCLING EQUIPMENT 9
ELECTRONIC LEAK DETECTOR 9
VACUUM PUMP 9
MANIFOLD GAUGE SET 9
SERVICE HOSES 10
SERVICE COUPLERS 10
REFRIGERANT WEIGHT SCALE 10
CHARGING CYLINDER 10
Precautions for Leak Detection Dye 10
IDENTIFICATION 11
IDENTIFICATION LABEL FOR VEHICLE 11
PREPARATION 12
Special Service Tools 12
HFC-134a (R-134a) Service Tools and Equipment 13
Commercial Service Tools 15
REFRIGERATION SYSTEM 16
Refrigerant Cycle 16
REFRIGERANT FLOW 16
FREEZE PROTECTION 16
Refrigerant System Protection 16
REFRIGERANT PRESSURE SENSOR 16
PRESSURE RELIEF VALVE 16
V-6 Variable Displacement Compressor 17
GENERAL INFORMATION 17
DESCRIPTION 18
Component Layout 21
LUBRICANT 22
Maintenance of Lubricant Quantity in Compressor 22
LUBRICANT 22
LUBRICANT RETURN OPERATION 22
LUBRICANT ADJUSTING PROCEDURE FOR COMPONENTS REPLACEMENT EXCEPT COMPRESSOR 23
LUBRICANT ADJUSTING PROCEDURE FOR COMPRESSOR REPLACEMENT 23
AIR CONDITIONER CONTROL 25
Control Operation 25
FAN CONTROL DIAL 25
TEMPERATURE CONTROL DIAL 25
MODE CONTROL DIAL 25
RECIRCULATION (REC) SWITCH 25
A/C SWITCH 25
Discharge Air Flow 26
System Description 27
SWITCHES AND THEIR CONTROL FUNCTION 27
TROUBLE DIAGNOSIS 28
How to Perform Trouble Diagnoses for Quick and Accurate Repair 28
WORK FLOW 28
SYMPTOM TABLE 28
Component Parts and Harness Connector Location 29
ENGINE COMPARTMENT 29
PASSENGER COMPARTMENT 30
Schematic —A/C, M— 31
Wiring Diagram — A/C, M — 32
Operational Check 36
CHECKING BLOWER 36
CHECKING DISCHARGE AIR 36
CHECKING INTAKE AIR 36
CHECKING TEMPERATURE DECREASE 36
CHECKING TEMPERATURE INCREASE 36
CHECKING A/C SWITCH 36
Mode Door 37
INSPECTION FLOW 37
Air Mix Door 38
INSPECTION FLOW 38

Intake Door Motor Circuit 39
INSPECTION FLOW 39
COMPONENT DESCRIPTION 39
DIAGNOSIS PROCEDURE FOR INTAKE DOOR MOTOR 40
Blower Motor Circuit 42
INSPECTION FLOW 42
DIAGNOSIS PROCEDURE FOR BLOWER MOTOR 42
COMPONENT INSPECTION 45
Magnet Clutch Circuit 46
INSPECTION FLOW 46
DIAGNOSIS PROCEDURE FOR MAGNET CLUTCH 47
ELECTRICAL COMPONENT INSPECTION 51
Insufficient Cooling 52
INSPECTION FLOW 52
PERFORMANCE TEST DIAGNOSIS 53
PERFORMANCE CHART 55
TROUBLE DIAGNOSIS FOR UNUSUAL PRES-SURE 56
Insufficient Heating 59
INSPECTION FLOW 59
Noise 60
INSPECTION FLOW 60
CONTROLLER 61
Removal and Installation 61
REMOVAL 61
INSTALLATION 61
Disassembly and Assembly 61
BLOWER UNIT 62
Removal and Installation 62
REMOVAL 62
INSTALLATION 62
Disassembly and Assembly 63
BLOWER MOTOR 64
Removal and Installation 64
REMOVAL 64
INSTALLATION 64
INTAKE DOOR MOTOR 65
Removal and Installation 65
REMOVAL 65
INSTALLATION 65
BLOWER FAN RESISTOR 66
Removal and Installation 66
REMOVAL 66
INSTALLATION 66
IN-CABIN MICROFILTER 67
Removal and Installation 67
FUNCTION 67
REPLACEMENT TIMING 67
REPLACEMENT PROCEDURES 67
HEATER & COOLING UNIT ASSEMBLY 68
Removal and Installation 68
REMOVAL 68
INSTALLATION 69
Disassembly and Assembly 70
MODE DOOR 71
Mode Door Cable Adjustment 71
AIR MIX DOOR 72
Air Mix Door Cable Adjustment 72
HEATER CORE 73
Removal and Installation 73
REMOVAL 73
INSTALLATION 73
DUCTS AND GRILLES 74
Removal and Installation 74
REMOVAL 74
INSTALLATION 77
REFRIGERANT LINES 78
HFC-134a (R-134a) Service Procedure 78
SETTING OF SERVICE TOOLS AND EQUIP-MENT 78
Components 80
Removal and Installation of Compressor 80
REMOVAL 80
INSTALLATION 81
Removal and Installation of Compressor Clutch 82
REMOVAL 82
INSTALLATION 84
Removal and Installation of Low-Pressure Flexible Hose 85
REMOVAL 85
INSTALLATION 85
Removal and Installation of High-Pressure Flexible Hose 86
REMOVAL 86
INSTALLATION 86
Removal and Installation of High-Pressure Pipe 86
REMOVAL 86
INSTALLATION 87
Removal and Installation of Condenser 87
REMOVAL 87
INSTALLATION 88
Removal and Installation of Liquid Tank 88
REMOVAL 88
INSTALLATION 88
Removal and Installation for Refrigerant Pressure Sensor 89
REMOVAL 89
INSTALLATION 89
Removal and Installation of Evaporator 89
REMOVAL 89
INSTALLATION 90
Removal and Installation of Expansion Valve 90
REMOVAL 90
INSTALLATION 90
Checking for Refrigerant Leaks 90
Checking System for Leaks Using the Fluorescent Leak Detector 91
Dye Injection 91
Electronic Refrigerant Leak Detector 91
PRECAUTIONS FOR HANDLING LEAK DETECTOR 91
CHECKING PROCEDURE 92
SERVICE DATA AND SPECIFICATIONS (SDS) 94
Compressor 94
Lubricant 94

Refrigerant 94
Engine Idling Speed 94
Belt Tension 94

A
B
C
D
E
F
G
H
I
MTC
K
L
M

PRECAUTIONS

PFP:00001

Precautions for Supplemental Restraint System (SRS) “AIR BAG” and “SEAT BELT PRE-TENSIONER”

AJS001M5

The Supplemental Restraint System such as “AIR BAG” and “SEAT BELT PRE-TENSIONER”, used along with a front seat belt, helps to reduce the risk or severity of injury to the driver and front passenger for certain types of collision. Information necessary to service the system safely is included in the SRS and SB section of this Service Manual.

WARNING:

- **To avoid rendering the SRS inoperative, which could increase the risk of personal injury or death in the event of a collision which would result in air bag inflation, all maintenance must be performed by an authorized NISSAN/INFINITI dealer.**
- **Improper maintenance, including incorrect removal and installation of the SRS, can lead to personal injury caused by unintentional activation of the system. For removal of Spiral Cable and Air Bag Module, see the SRS section.**
- **Do not use electrical test equipment on any circuit related to the SRS unless instructed to in this Service Manual. SRS wiring harnesses can be identified by yellow and/or orange harnesses or harness connectors.**

Precautions for Working with HFC-134a (R-134a)

AJS001OH

WARNING:

- **CFC-12 (R-12) refrigerant and HFC-134a (R-134a) refrigerant are not compatible. If the refrigerants are mixed and compressor malfunction is likely to occur, refer to “CONTAMINATED REFRIGERANT” below. To determine the purity of HFC-134a (R-134a) in the vehicle and recovery tank, use Refrigerant Recovery/Recycling Recharging equipment and Refrigerant identifier.**
- **Use only specified lubricant for the HFC-134a (R-134a) A/C system and HFC-134a (R-134a) components. If lubricant other than that specified is used, compressor malfunction is likely to occur.**
- **The specified HFC-134a (R-134a) lubricant rapidly absorbs moisture from the atmosphere. The following handling precautions must be observed:**
  - **When removing refrigerant components from a vehicle, immediately cap (seal) the component to minimize the entry of moisture from the atmosphere.**
  - **When installing refrigerant components to a vehicle, do not remove the caps (unseal) until just before connecting the components. Connect all refrigerant loop components as quickly as possible to minimize the entry of moisture into system.**
  - **Only use the specified lubricant from a sealed container. Immediately reseal containers of lubricant. Without proper sealing, lubricant will become moisture saturated and should not be used.**
  - **Avoid breathing A/C refrigerant and lubricant vapor or mist. Exposure may irritate eyes, nose and throat. Remove HFC-134a (R-134a) from the A/C system, using certified service equipment meeting requirements of SAE J-2210 [HFC-134a (R-134a) recycling equipment], or J-2209 [HFC-134a (R-134a) recovery equipment]. If accidental system discharge occurs, ventilate work area before resuming service. Additional health and safety information may be obtained from refrigerant and lubricant manufacturers.**
  - **Do not allow lubricant (Nissan A/C System Oil Type S) to come in contact with styrofoam parts. Damage may result.**

CONTAMINATED REFRIGERANT

If a refrigerant other than pure HFC-134a (R-134a) is identified in a vehicle, your options are:

- Explain to the customer that environmental regulations prohibit the release of contaminated refrigerant into the atmosphere.
- Explain that recovery of the contaminated refrigerant could damage your service equipment and refrigerant supply.
- Suggest the customer return the vehicle to the location of previous service where the contamination may have occurred.
- If you choose to perform the repair, recover the refrigerant using only **dedicated equipment and containers. Do not recover contaminated refrigerant into your existing service equipment.** If your facility does not have dedicated recovery equipment, you may contact a local refrigerant product retailer for available service. This refrigerant must be disposed of in accordance with all federal and local regulations. In addition, replacement of all refrigerant system components on the vehicle is recommended.
- If the vehicle is within the warranty period, the air conditioner warranty is void. Please contact Nissan Customer Affairs for further assistance.

General Refrigerant Precautions

AJS001M7

WARNING:

- **Do not release refrigerant into the air. Use approved recovery/recycling equipment to capture the refrigerant every time an air conditioning system is discharged.**
- **Always wear eye and hand protection (goggles and gloves) when working with any refrigerant or air conditioning system.**
- **Do not store or heat refrigerant containers above 52°C (125°F).**
- **Do not heat a refrigerant container with an open flame; if container warming is required, place the bottom of the container in a warm pail of water.**
- **Do not intentionally drop, puncture, or incinerate refrigerant containers.**
- **Keep refrigerant away from open flames: poisonous gas will be produced if refrigerant burns.**
- **Refrigerant will displace oxygen, therefore be certain to work in well ventilated areas to prevent suffocation.**
- **Do not pressure test or leak test HFC-134a (R-134a) service equipment and/or vehicle air conditioning systems with compressed air during repair. Some mixtures of air and HFC-134a (R-134a) have been shown to be combustible at elevated pressures. These mixtures, if ignited, may cause injury or property damage. Additional health and safety information may be obtained from refrigerant manufacturers.**

Lubricant Precautions

AJS001M8

- Use only specified lubricant for the HFC-134a (R-134a) A/C system and HFC-134a (R-134a) components. If lubricant other than that specified is used, compressor malfunction is likely to occur.
- The specified HFC-134a (R-134a) lubricant rapidly absorbs moisture from the atmosphere. The following handling precautions must be observed:
  - When removing refrigerant components from a vehicle, immediately cap (seal) the component to minimize the entry of moisture from the atmosphere.
  - When installing refrigerant components to a vehicle, do not remove the caps (unseal) until just before connecting the components. Connect all refrigerant loop components as quickly as possible to minimize the entry of moisture into system.
  - Only use the specified lubricant from a sealed container. Immediately reseal containers of lubricant. Without proper sealing, lubricant will become moisture saturated and should not be used.
- Avoid breathing A/C refrigerant and lubricant vapor or mist. Exposure may irritate eyes, nose and throat. Remove HFC-134a (R-134a) from the A/C system, using certified service equipment meeting requirements of SAE J-2210 [HFC-134a (R-134a) recycling equipment] or J-2209 [HFC-134a (R-134a) recovery equipment]. If accidental system discharge occurs, ventilate work area before resuming service. Additional health and safety information may be obtained from refrigerant and lubricant manufacturers.
- Do not allow lubricant (Nissan A/C System Oil Type S) to come in contact with styrofoam parts. Damage may result.

A B C D E F G H I MTC K L M

Precautions for Refrigerant Connection

AJS001M9

A new type refrigerant connection has been introduced to all refrigerant lines except the following location.

- Expansion valve to cooling unit
- Refrigerant pressure sensor to liquid tank

FEATURES OF NEW TYPE REFRIGERANT CONNECTION

- The O-ring has been relocated. It has also been provided with a groove for proper installation. This eliminates the chance of the O-ring being caught in, or damaged by, the mating part. The sealing direction of the O-ring is now set vertically in relation to the contacting surface of the mating part to improve sealing characteristics.
- The reaction force of the O-ring will not occur in the direction that causes the joint to pull out, thereby facilitating piping connections.

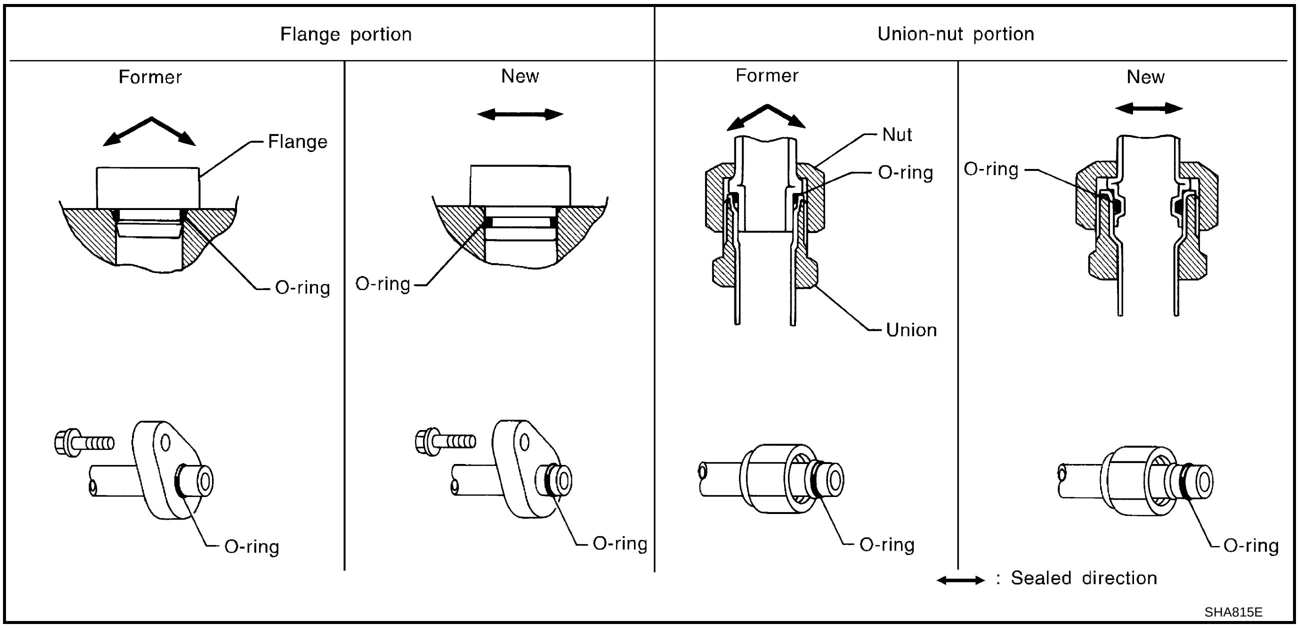

O-RING AND REFRIGERANT CONNECTION

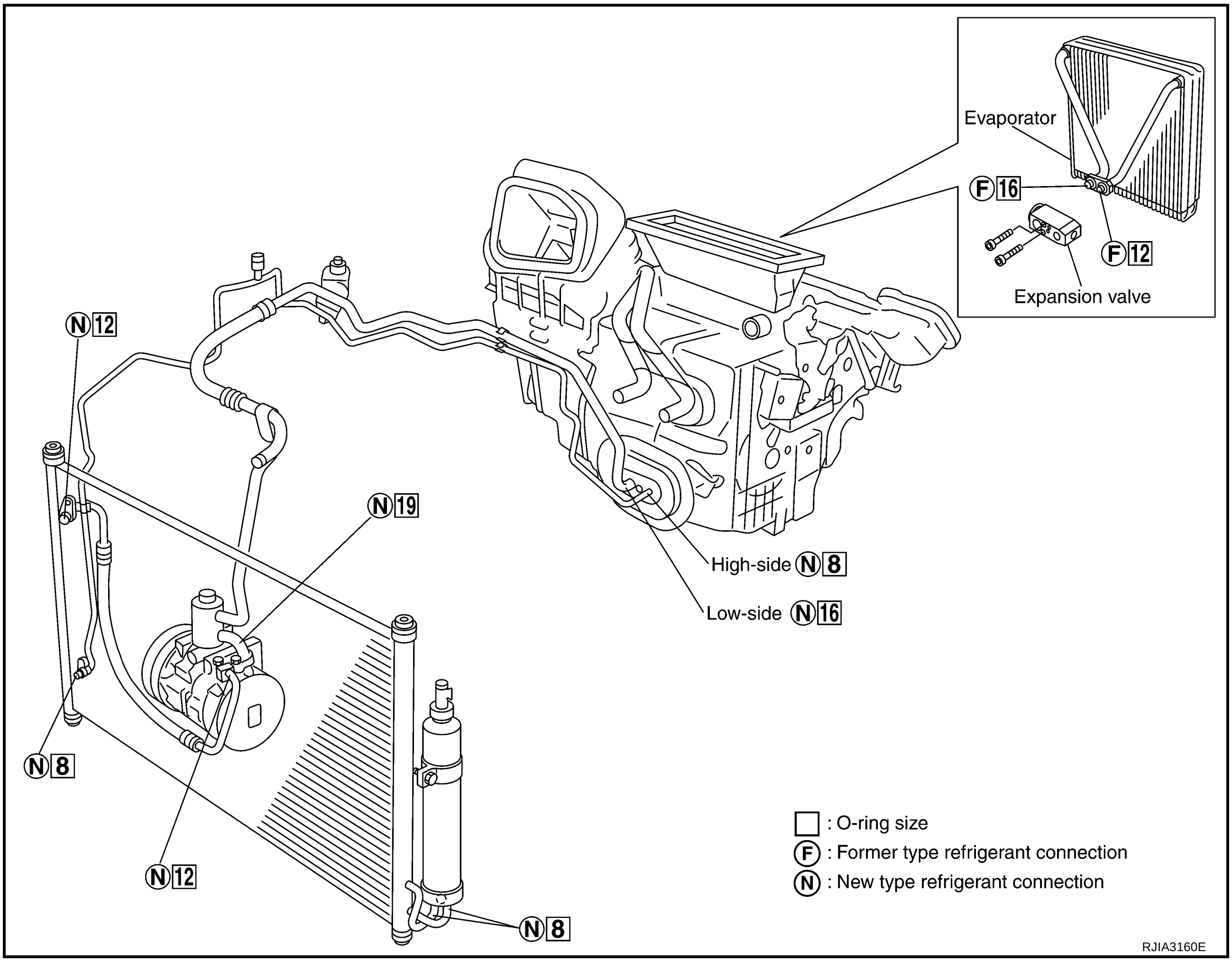

RJIA3160E

CAUTION:

The new and former refrigerant connections use different O-ring configurations. Do not confuse O-rings since they are not interchangeable. If a wrong O-ring is installed, refrigerant will leak at, or around, the connection.

O-Ring Part Numbers and Specifications

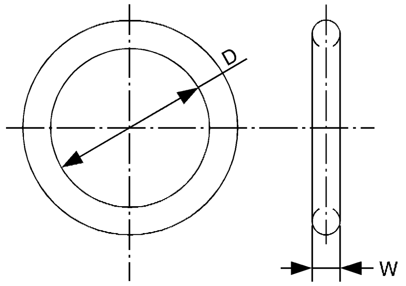

SHA814E

Connection type	O-ring size	Part number	D mm (in)	W mm (in)
New	8	92471 N8210	6.80 (0.2680)	1.85 (0.0728)
Former		92470 N8200	6.07 (0.2390)	1.78 (0.0701)
Former	10	J2476 89956	9.25 (0.3642)	1.78 (0.0701)
New	12	92472 N8210	10.90 (0.429)	2.43 (0.0957)
Former		92475 71L00	11.00 (0.433)	2.40 (0.0940)
New	16	92473 N8210	13.60 (0.535)	2.43 (0.0957)
Former		92475 72L00	14.30 (0.563)	2.30 (0.0910)
New	19	92474 N8210	16.50 (0.650)	2.43 (0.0957)
Former		92477 N8200	17.12 (0.674)	1.78 (0.0701)

WARNING:

Make sure all refrigerant is discharged into the recycling equipment and the pressure in the system is less than atmospheric pressure. Then gradually loosen the discharge side hose fitting and remove it.

CAUTION:

When replacing or cleaning refrigerant cycle components, observe the following.

- **When the compressor is removed, store it in the same way as it is when mounted on the car. Failure to do so will cause lubricant to enter the low-pressure chamber.**
- **When connecting tubes, always use a torque wrench and a back-up wrench.**
- **After disconnecting tubes, immediately plug all openings to prevent entry of dirt and moisture.**
- **When installing an air conditioner in the vehicle, connect the pipes at the final stage of the operation. Never remove the seal caps of pipes and other components until just before required for connection.**
- **Allow components stored in cool areas to warm to working area temperature before removing seal caps. This prevents condensation from forming inside A/C components.**
- **Thoroughly remove moisture from the refrigeration system before charging the refrigerant.**
- **Always replace used O-rings.**
- **When connecting tube, apply lubricant to circle of the O-rings shown in illustration. Be careful not to apply lubricant to threaded portion.**

Lubricant name : Nissan A/C System Oil Type S
Part number : KLH00-PAGS0

- **O-ring must be closely attached to dented portion of tube.**
- **When replacing the O-ring, be careful not to damage O-ring and tube.**
- **Connect tube until you hear it click, then tighten the nut or bolt by hand until snug. Make sure that the O-ring is installed to tube correctly.**
- **After connecting line, perform leak test and make sure that there is no leakage from connections. When the refrigerant leaking point is found, disconnect that line and replace the O-ring. Then tighten connections of seal seat to the specified torque.**

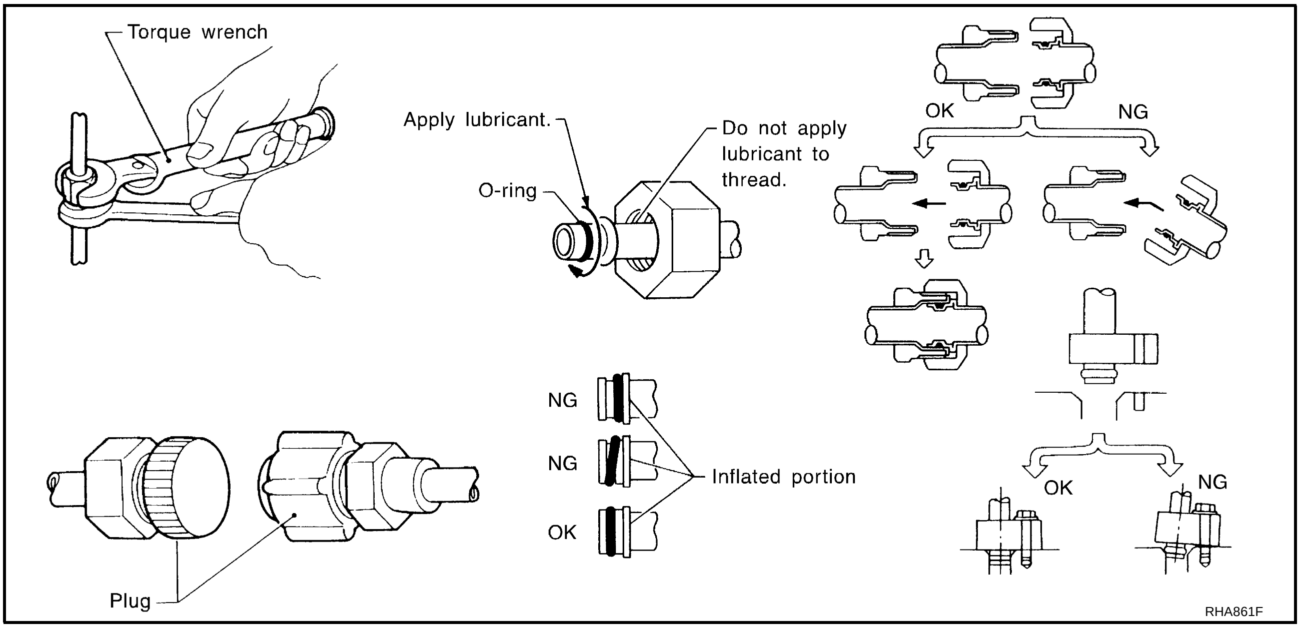

Precautions for Servicing Compressor

AJS001MA

- **Plug all openings to prevent moisture and foreign matter from entering.**
- **When the compressor is removed, store it in the same position as it is when mounted on the car.**
- **When replacing or repairing compressor, follow “Maintenance of Lubricant Quantity in Compressor” exactly. Refer to** **MTC-22, "Maintenance of Lubricant Quantity in Compressor" .**
- **Keep friction surfaces between clutch and pulley clean. If the surface is contaminated, with lubricant, wipe it off by using a clean waste cloth moistened with thinner.**
- **After compressor service operation, turn the compressor shaft by hand more than five turns in both directions. This will equally distribute lubricant inside the compressor. After the compressor is installed, let the engine idle and operate the compressor for one hour.**
- **After replacing the compressor magnet clutch, apply voltage to the new one and check for normal operation.**

Precautions for Service Equipment

AJS001MB

RECOVERY/RECYCLING EQUIPMENT

Be certain to follow the manufacturer’s instructions for machine operation and machine maintenance. Never introduce any refrigerant other than that specified into the machine.

ELECTRONIC LEAK DETECTOR

Be certain to follow the manufacturer’s instructions for tester operation and tester maintenance.

VACUUM PUMP

The lubricant contained inside the vacuum pump is not compatible with the specified lubricant for HFC-134a (R-134a) A/C systems. The vent side of the vacuum pump is exposed to atmospheric pressure. So the vacuum pump lubricant may migrate out of the pump into the service hose. This is possible when the pump is switched off after evacuation (vacuuming) and hose is connected to it.
To prevent this migration, use a manual valve placed near the hose-to-pump connection, as follows.

- Usually vacuum pumps have a manual isolator valve as part of the pump. Close this valve to isolate the service hose from the pump.
- For pumps without an isolator, use a hose equipped with a manual shut-off valve near the pump end. Close the valve to isolate the hose from the pump.
- If the hose has an automatic shut-off valve, disconnect the hose from the pump. As long as the hose is connected, the valve is open and lubricating oil may migrate.

Some one-way valves open when vacuum is applied and close under no vacuum condition. Such valves may restrict the pump’s ability to pull a deep vacuum and are not recommended.

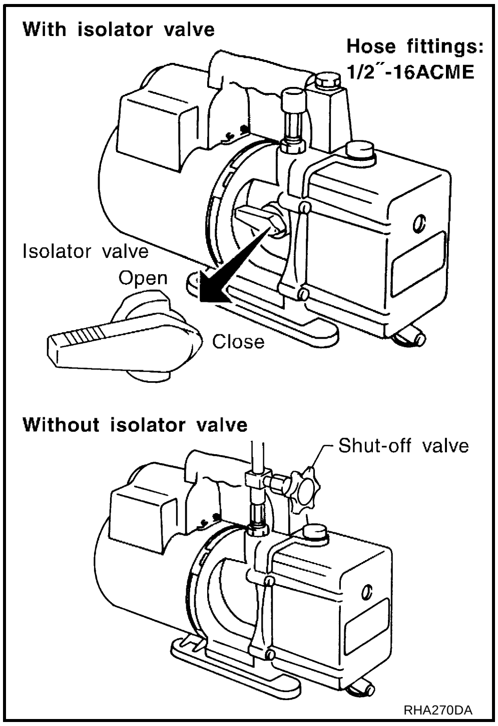

MANIFOLD GAUGE SET

Be certain that the gauge face indicates HFC-134a or R-134a. Be sure the gauge set has 1/2″-16 ACME threaded connections for service hoses. Confirm the set has been used only with refrigerant HFC-134a (R-134a) and specified lubricants.

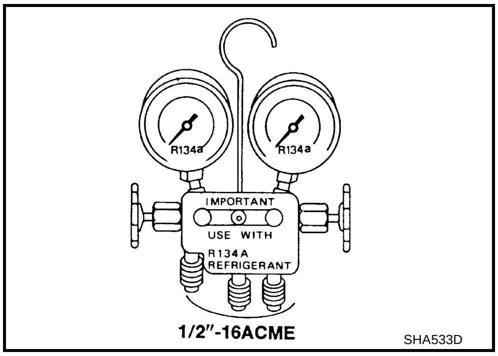

SERVICE HOSES

Be certain that the service hoses display the markings described (colored hose with black stripe). All hoses must include positive shut-off devices (either manual or automatic) near the end of the hoses opposite the manifold gauge.

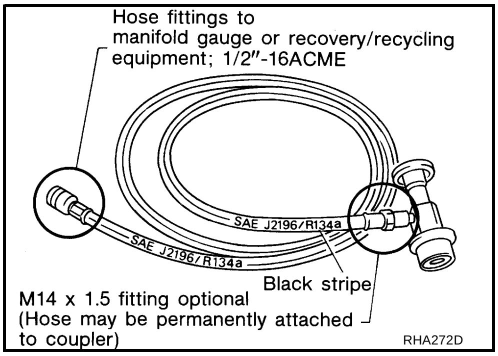

RHA272D

SERVICE COUPLERS

Never attempt to connect HFC-134a (R-134a) service couplers to a CFC-12 (R-12) A/C system. The HFC-134a (R-134a) couplers will not properly connect to the CFC-12 (R-12) system. However, if an improper connection is attempted, discharging and contamination may occur.

Shut-off valve rotation	A/C service valve
Clockwise	Open
Counterclockwise	Close

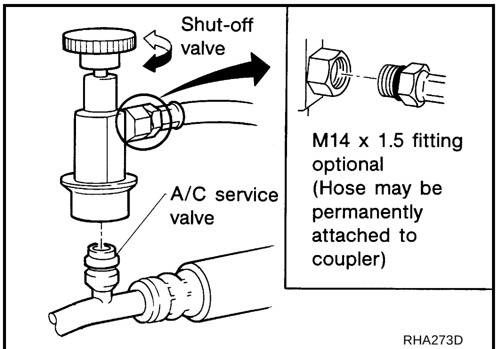

RHA273D

REFRIGERANT WEIGHT SCALE

Verify that no refrigerant other than HFC-134a (R-134a) and specified lubricants have been used with the scale. If the scale controls refrigerant flow electronically, the hose fitting must be 1/2″-16 ACME.

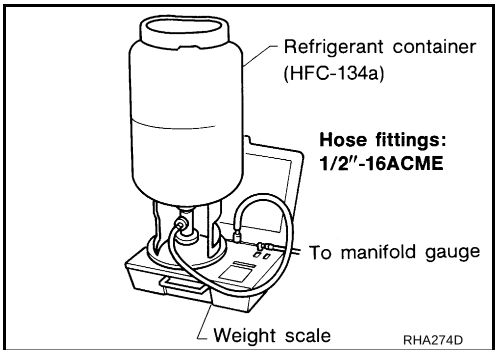

RHA274D

CHARGING CYLINDER

Using a charging cylinder is not recommended. Refrigerant may be vented into air from cylinder's top valve when filling the cylinder with refrigerant. Also, the accuracy of the cylinder is generally less than that of an electronic scale or of quality recycle/recharge equipment.

Precautions for Leak Detection Dye

AJS001MC

- The A/C system contains a fluorescent leak detection dye used for locating refrigerant leaks. An ultraviolet (UV) lamp is required to illuminate the dye when inspecting for leaks.
- Always wear fluorescence enhancing UV safety goggles to protect your eyes and enhance the visibility of the fluorescent dye.
- The fluorescent dye leak detector is not a replacement for an electronic refrigerant leak detector. The fluorescent dye leak detector should be used in conjunction with an electronic refrigerant leak detector to (SST: J-41995) pin-point refrigerant leaks.
- For your safety and your customer's satisfaction, read and follow all manufacture's operating instructions and precautions prior to performing the work.
- A compressor shaft seal should not be repaired because of dye seepage. The compressor shaft seal should only be repaired after confirming the leak with an electronic refrigerant leak detector (SST: J-41995).
- Always remove any remaining dye from the leak area after repairs are complete to avoid a misdiagnosis during a future service.

- Do not allow dye to come into contact with painted body panels or interior components. If dye is spilled, clean immediately with the approved dye cleaner. Fluorescent dye left on a surface for an extended period of time cannot be removed.
- Do not spray the fluorescent dye cleaning agent on hot surfaces (engine exhaust manifold, etc.).
- Do not use more than one refrigerant dye bottle (1/4 ounce / 7.4 cc) per A/C system.
- Leak detection dyes for HFC-134a (R-134a) and CFC-12 (R-12) A/C systems are different. Do not use HFC-134a (R-134a) leak detection dye in CFC-12 (R-12) A/C system or CFC-12 (R-12) leak detection dye in HFC-134a (R-134a) A/C system or A/C system damage may result.
- The fluorescent properties of the dye will remain for over three (3) years unless a compressor malfunction occurs.

IDENTIFICATION

NOTE:
Vehicles with factory installed fluorescent dye have a green label.
Vehicles without factory installed fluorescent dye have a blue label.

IDENTIFICATION LABEL FOR VEHICLE

Vehicles with factory installed fluorescent dye have this identification label on the front side of hood.

PREPARATION

PFP:00002

Special Service Tools

AJS001O8

The actual shapes of Kent-Moore tool may differ from those of special service tools illustrated here.

Tool number (Kent-Moore No.) Tool name		Description
KV99106100 (J-41260) Clutch disc wrench	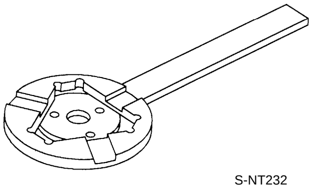 S-NT232 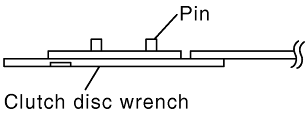 SJIA1168E	Removing shaft nut and clutch disc
KV99232340 (J-38874) Clutch disc puller	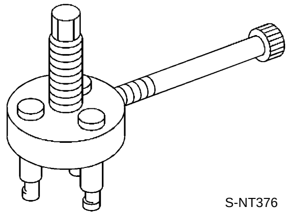 S-NT376	Removing clutch disc
KV99106200 (J-41261) Pulley installer	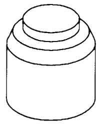 S-NT235	Installing pulley

HFC-134a (R-134a) Service Tools and Equipment

AJS001O9

Never mix HFC-134a (R-134a) refrigerant and/or its specified lubricant with CFC-12 (R-12) refrigerant and/or its lubricant.
Separate and non-interchangeable service equipment must be used for handling each type of refrigerant/lubricant.
Refrigerant container fittings, service hose fittings and service equipment fittings (equipment which handles refrigerant and/or lubricant) are different between CFC-12 (R-12) and HFC-134a (R-134a). This is to avoid mixed use of the refrigerants/lubricant.
Adapters that convert one size fitting to another must never be used: refrigerant/lubricant contamination will occur and compressor malfunction will result.

Tool number (Kent-Moore No.) Tool name		Description
HFC-134a (R-134a) refrigerant	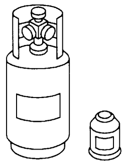 S-NT196	Container color: Light blue Container marking: HFC-134a (R-134a) Fitting size: Thread size ● Large container 1/2″-16 ACME
KLH00-PAGS0 (-) Nissan A/C System Oil Type S (DH-PS)	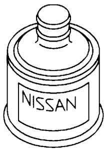 S-NT197	Type: Polyalkylene glycol oil (PAG), type S (DH-PS) Application: HFC-134a (R-134a) wobble (swash) plate compressors (Nissan only) Capacity: 40 mℓ (1.4 Imp fl oz)
(ACR2005-NI) ACR5 A/C Service Center	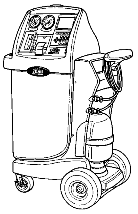 WJIA0293E	Function: Refrigerant recovery, recycling and recharging
(J-41995) Electrical leak detector	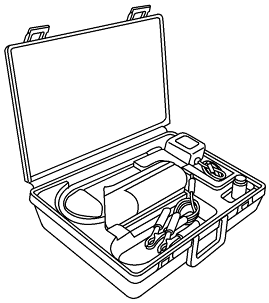 AHA281A	Power supply: DC 12V (Battery terminal)

Tool number (Kent-Moore No.) Tool name		Description
(J-43926) Refrigerant dye leak detection kit Kit includes: (J-42220) UV lamp and UV safety goggles (J-41459) HFC-134a (R-134a) dye injector Use with J-41447, 1/4 ounce bottle (J-41447) HFC-134a (R-134a) fluorescent leak detection dye (Box of 24, 1/4 ounce bottles) (J-43872) Refrigerant dye cleaner	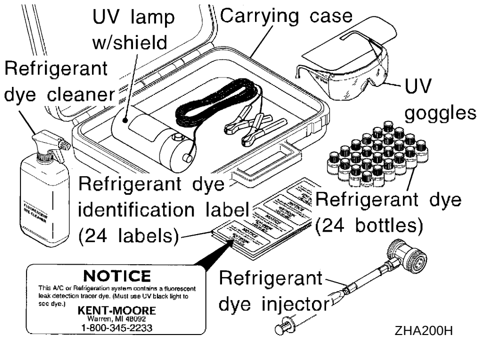 ZHA200H	Power supply: DC 12V (Battery terminal)
(J-42220) UV lamp and UV safety goggles	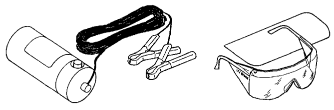 SHA438F	Power supply: DC 12V (Battery terminal) For checking refrigerant leak when fluorescent dye is installed in A/C system Includes: UV lamp and UV safety goggles
(J-41447) HFC-134a (R-134a) fluorescent leak detection dye (Box of 24, 1/4 ounce bottles)	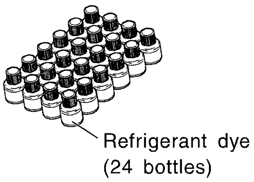 SHA439F	Application: For HFC-134a (R-134a) PAG oil Container: 1/4 ounce (7.4cc) bottle (Includes self-adhesive dye identification labels for affixing to vehicle after charging system with dye.)
(J-41459) HFC-134a (R-134a) dye injector Use with J-41447, 1/4 ounce bottle	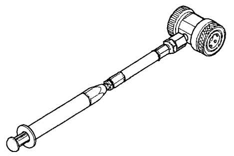 SHA440F	For injecting 1/4 ounce of fluorescent leak detection dye into A/C system
(J-43872) Refrigerant dye cleaner	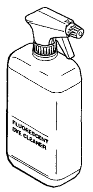 SHA441F	For cleaning dye spills
(J-39183) Manifold gauge set (with hoses and couplers)	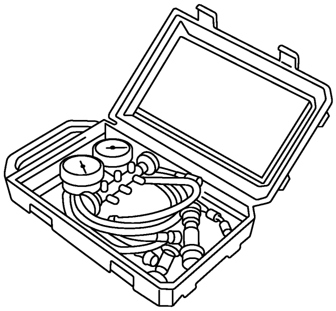 RJIA0196E	Identification: ● The gauge face indicates HFC-134a (R-134a). Fitting size: Thread size ● 1/2″-16 ACME

PREPARATION

Tool number (Kent-Moore No.) Tool name		Description
Service hoses ● (J-39501-72) High-pressure side hose ● (J-39502-72) Low-pressure side hose ● (J-39476-72) Utility hose	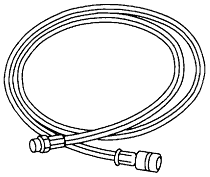 S-NT201	Hose color: ● Low hose: Blue with black stripe ● High hose: Red with black stripe ● Utility hose: Yellow with black stripe or green with black stripe Hose fitting to gauge: ● 1/2″-16 ACME
Service couplers ● (J-39500-20) High-pressure side coupler ● (J-39500-24) Low-pressure side coupler	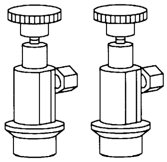 S-NT202	Hose fitting to service hose: M14 x 1.5 fitting is optional or permanently attached.
(J-39650) Refrigerant weight scale	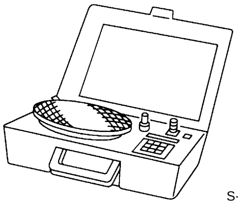 S-NT200	For measuring of refrigerant Fitting size: Thread size 1/2″-16 ACME
(J-39649) Vacuum pump (Including the isolator valve)	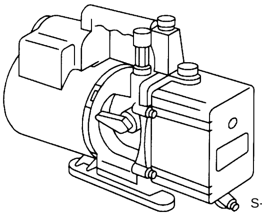 S-NT203	Capacity: ● Air displacement: 4 CFM ● Micron rating: 20 microns ● Oil capacity: 482 g (17 oz) Fitting size: Thread size 1/2″-16 ACME

Commercial Service Tools

AJS001OA

Tool name		Description
Refrigerant identifier equipment	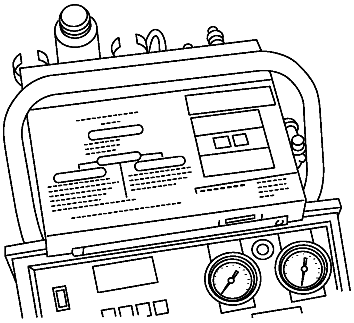 RJIA0197E	Checking for refrigerant purity and system contamination
Power tool	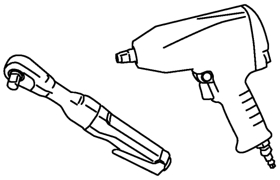 PBIC0190E	For loosening bolts and nuts

REFRIGERATION SYSTEM

PFP:KA990

Refrigerant Cycle

AJS001MG

REFRIGERANT FLOW

The refrigerant flows in the standard pattern, that is, through the compressor, the condenser with liquid tank, through the evaporator, and back to the compressor. The refrigerant evaporation through the evaporator is controlled by an externally equalized expansion valve, located inside the evaporator case.

FREEZE PROTECTION

To prevent evaporator frozen up, the evaporator air temperature is monitored, and the voltage signal to the auto amp. will make the A/C relay go OFF and stop the compressor.

Refrigerant System Protection

AJS001MH

REFRIGERANT PRESSURE SENSOR

The refrigerant system is protected against excessively high- or low-pressures by the refrigerant pressure sensor, located on the liquid tank. If the system pressure rises above, or falls below the specifications, the refrigerant pressure sensor detects the pressure inside the refrigerant line and sends the voltage signal to the ECM. ECM makes the A/C relay go OFF and stops the compressor when pressure on the high-pressure side detected by refrigerant pressure sensor is over about 2,746 kPa (28 kg/cm^2 , 398 psi), or below about 134 kPa (1.4 kg/cm^2 , 20 psi).

PRESSURE RELIEF VALVE

The refrigerant system is also protected by a pressure relief valve, located in the rear head of the compressor. When the pressure of refrigerant in the system increases to an unusual level [more than 3,727 kPa (38 kg/cm^2 , 540 psi)], the release port on the pressure relief valve automatically opens and releases refrigerant into the atmosphere.

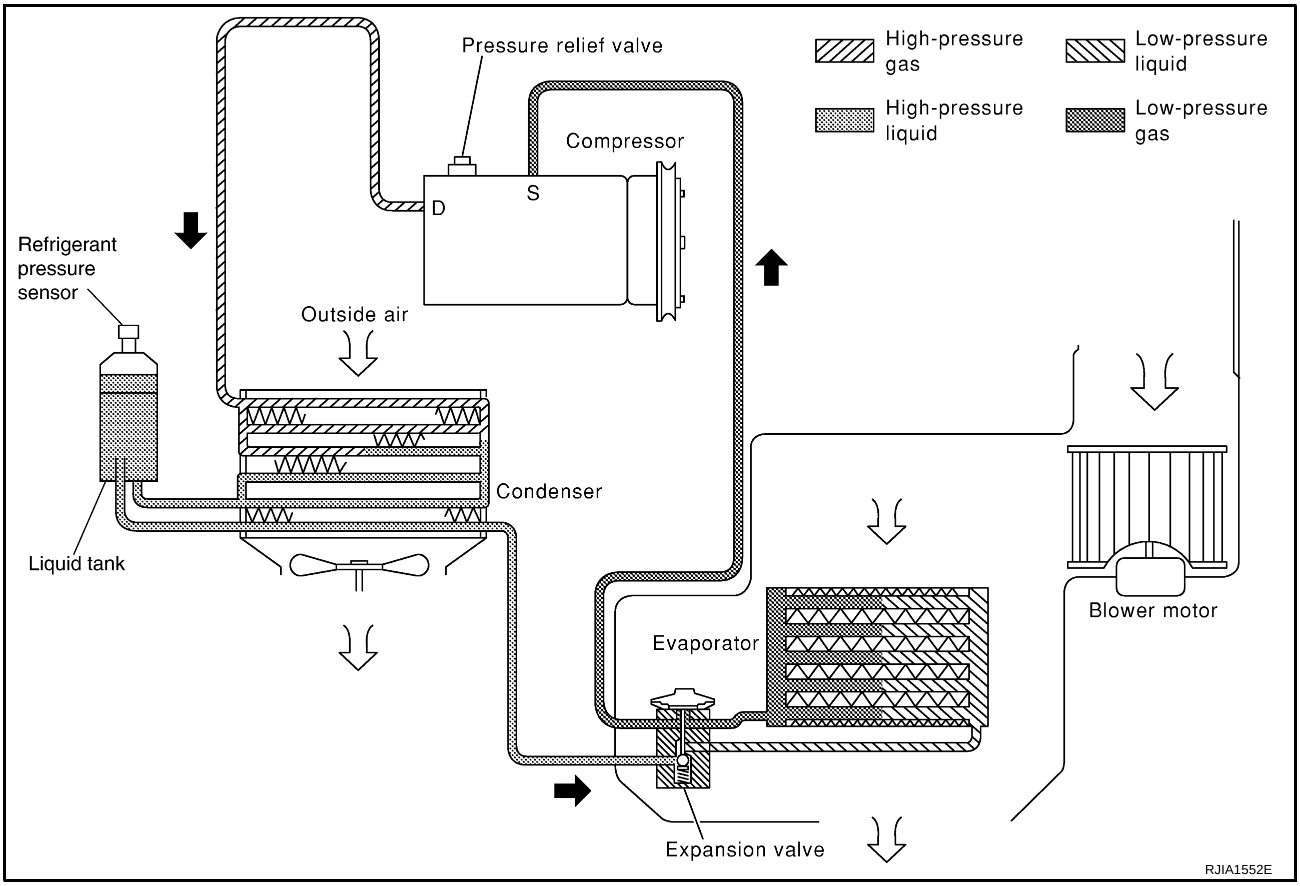

V-6 Variable Displacement Compressor

AJS001MI

GENERAL INFORMATION

1. The V-6 variable compressor differs from previous units. The vent temperatures of the V-6 variable compressor do not drop too far below 5°C (41°F) when:
   Evaporator intake air temperature is less than 20°C (68°F).
   Engine is running at speeds less than 1,500 rpm.
   This is because the V-6 compressor provides a means of “capacity” control.
2. The V-6 variable compressor provides refrigerant control under varying conditions. During cold winters, it may not produce high refrigerant pressure discharge (compared to previous units) when used with air conditioning systems.
3. A “clanking” sound may occasionally be heard during refrigerant charge. The sound indicates that the tilt angle of the wobble (swash) plate has changed and is not a malfunction.
4. For air conditioning systems with the V-6 compressor, the clutch remains engaged unless: the system main switch, fan switch or ignition switch is turned OFF. When ambient (outside) temperatures are low or when the amount of refrigerant is insufficient, the clutch is disengaged to protect the compressor.
5. A constant range of suction pressure is maintained when engine speed is greater than a certain value. It normally ranges from 147 to 177 kPa (1.5 to 1.8 kg/cm^2 , 21 to 26 psi) under varying conditions.
   In previous compressors, however, suction pressure was reduced with increases in engine speed.

DESCRIPTION

General

The variable compressor is basically a swash plate type that changes piston stroke in response to the required cooling capacity.

The tilt of the wobble (swash) plate allows the piston's stroke to change so that refrigerant discharge can be continuously changed from 13.5 to 146 cm^3 (0.824 to 8.91 cu in).

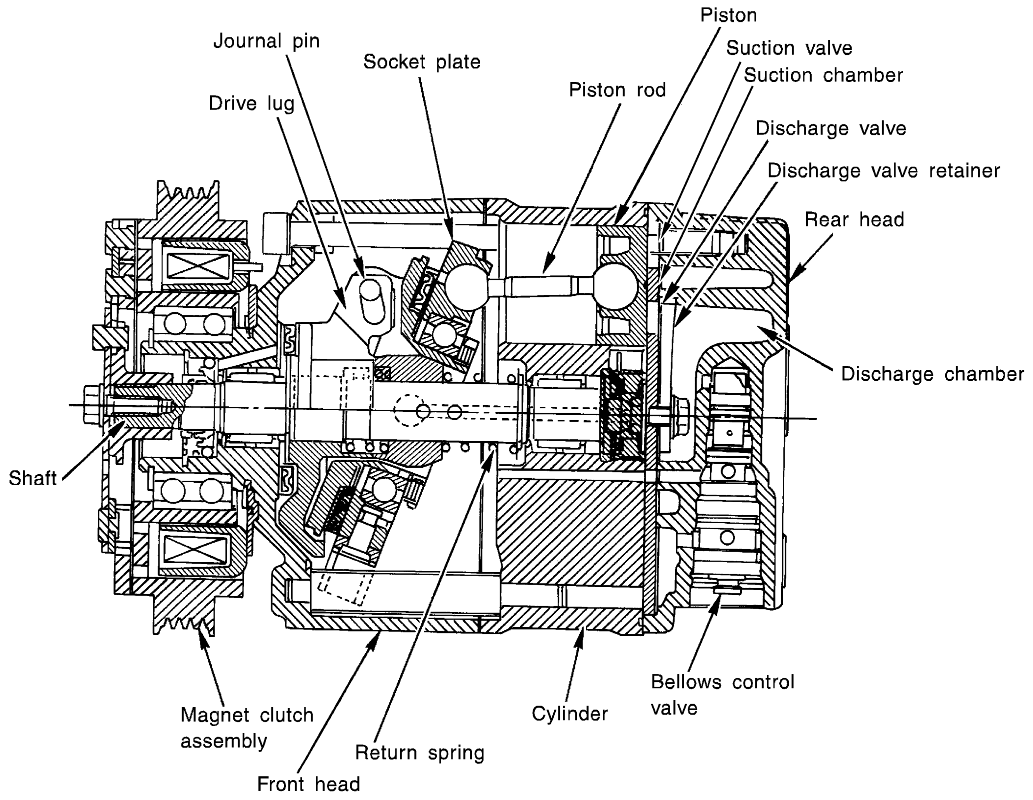

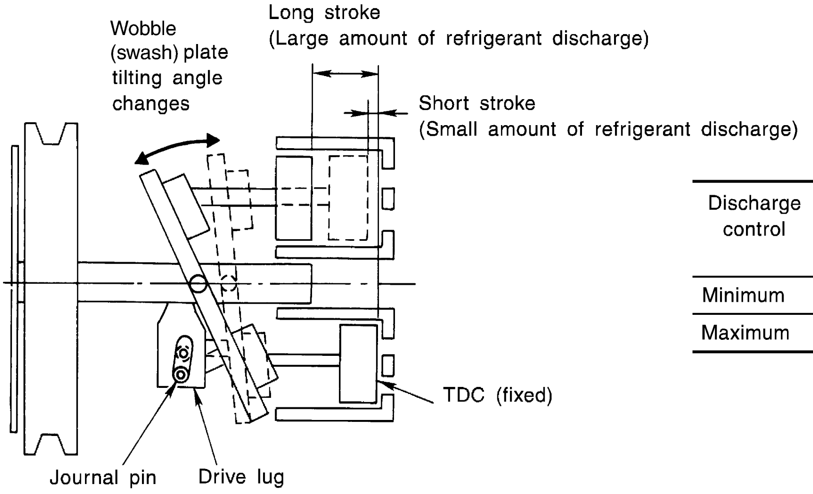

Discharge control	Discharge capacity cm^3 (cu in)/rev.	Piston stroke length mm (in)
Minimum	13.5 (0.824)	2.3 (0.091)
Maximum	146 (8.91)	25 (0.984)

SJIA0631E

Operation

1. Operation Control Valve
   Operation control valve is located in the suction port (low-pressure) side, and opens or closes in response to changes in refrigerant suction pressure.
   Operation of the valve controls the internal pressure of the crankcase.
   The angle of the wobble (swash) plate is controlled between the crankcase's internal pressure and the piston cylinder pressure.
2. Maximum Cooling
   Refrigerant pressure on the low-pressure side increases with an increase in heat loads.
   When this occurs, the control valve's bellows compress to open the low-pressure side valve and close the high-pressure side valve.
   This causes the following pressure changes:
   - The crankcase's internal pressure to equal the pressure on the low-pressure side;
   - The cylinder's internal pressure to be greater than the crankcase's internal pressure.

   Under this condition, the wobble (swash) plate is set to the maximum stroke position.

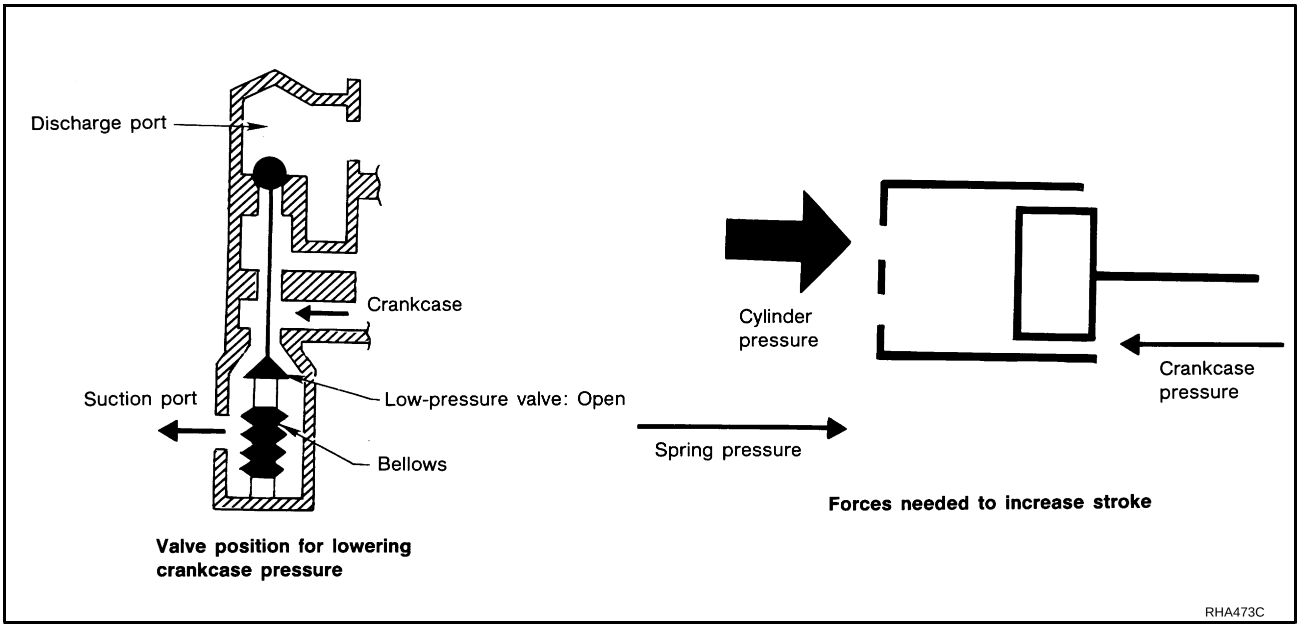

3. Capacity Control
   - Refrigerant pressure on suction side is low during high speed driving or when ambient or interior temperature is low.
   - The bellows expands when refrigerant pressure on the suction pressure side drops below approximately 177 kPa (1.8 kg/cm^2 , 26 psi).

   Since suction pressure is low, it makes the suction port close and the discharge port open. Thus, crankcase pressure becomes high as high-pressure enters the crankcase.
   - The force acts around the journal pin near the wobble (swash) plate, and is generated by the pressure difference between before and behind the piston.

   The drive lug and journal pin are located where the piston generates the highest pressure. Piston pressure is between suction pressure Ps and discharge pressure Pd, which is near suction pressure Ps. If crankcase pressure Pc rises due to capacity control, the force around the journal pin makes the wobble (swash) plate angle decrease and also the piston stroke decrease. In other words, crankcase pressure increase triggers pressure difference between the piston and the crankcase. The pressure difference changes the angle of the wobble (swash) plate.

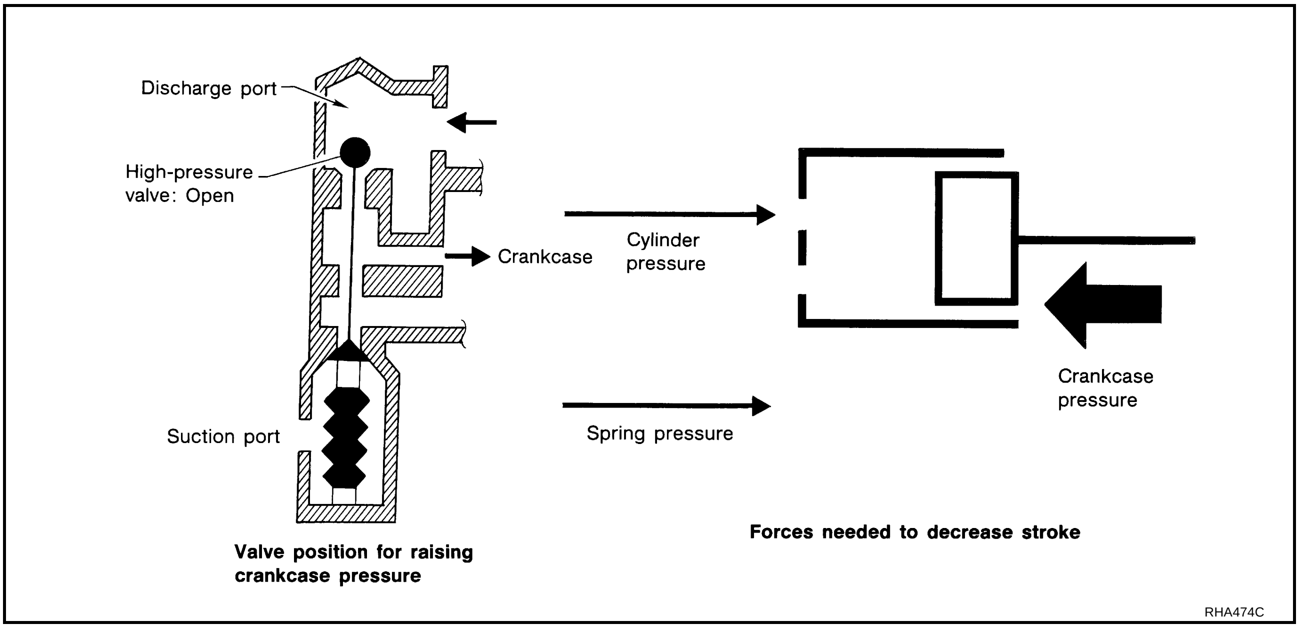
Discharge port
High-pressure valve: Open
Crankcase
Suction port
Cylinder pressure
Spring pressure
Crankcase pressure
Valve position for raising crankcase pressure
Forces needed to decrease stroke
RHA474C

Component Layout

AJS001MJ

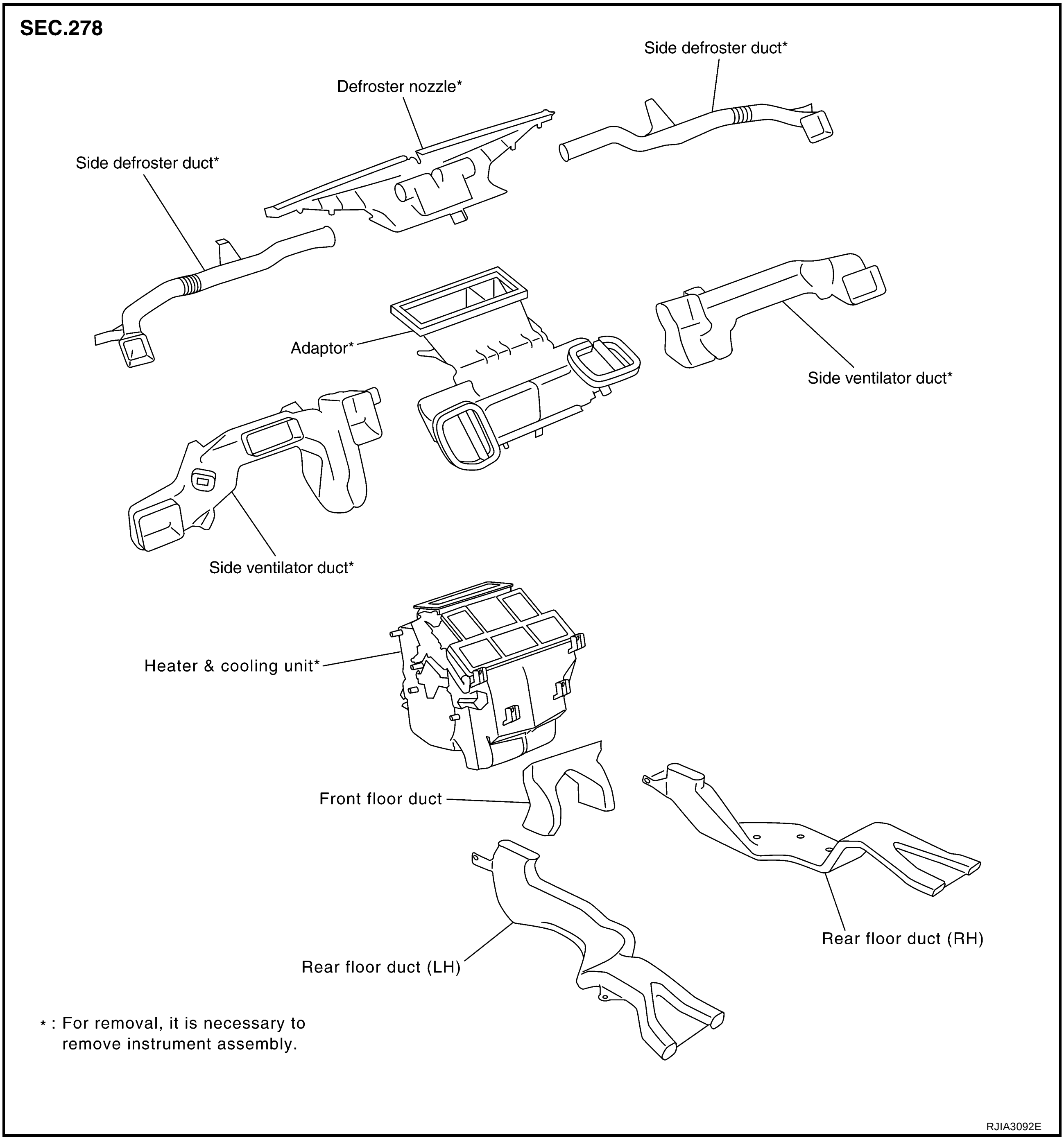

LUBRICANT

PFP:KLG00

Maintenance of Lubricant Quantity in Compressor

AJS001MK

The lubricant in the compressor circulates through the system with the refrigerant. Add lubricant to compressor when replacing any component or after a large refrigerant leakage occurred. It is important to maintain the specified amount.
If lubricant quantity is not maintained properly, the following malfunctions may result:

- Lack of lubricant: May lead to a seized compressor.
- Excessive lubricant: Inadequate cooling (thermal exchange interference)

LUBRICANT

Name : Nissan A/C System Oil Type S
Part number : KLH00-PAGS0

LUBRICANT RETURN OPERATION

Adjust the lubricant quantity according to the test group shown below.

1. CHECK LUBRICANT RETURN OPERATION

Can lubricant return operation be performed?

- A/C system works properly.
- There is no evidence of a large amount of lubricant leakage.

CAUTION:
If excessive lubricant leakage is noted, never perform the lubricant return operation.

OK or NG

OK >> GO TO 2.
NG >> GO TO 3.

2. PERFORM LUBRICANT RETURN OPERATION, PROCEEDING AS FOLLOWS

1. Start engine, and set the following conditions:
   - Engine speed: Idling to 1,200 rpm
   - A/C switch: ON
   - Blower speed: Max. position
   - Temp. control: Optional [Set so that intake air temperature is 25 to 30°C (77 to 86°F).]
   - Intake position: Recirculation (REC)
2. Perform lubricant return operation for about 10 minutes.
3. Stop engine.

>> GO TO 3.

3. CHECK REPLACEMENT PART

Should the compressor be replaced?

YES >> GO TO MTC-23, "LUBRICANT ADJUSTING PROCEDURE FOR COMPRESSOR REPLACEMENT" .
NO >> GO TO MTC-23, "LUBRICANT ADJUSTING PROCEDURE FOR COMPONENTS REPLACEMENT EXCEPT COMPRESSOR" .

LUBRICANT ADJUSTING PROCEDURE FOR COMPONENTS REPLACEMENT EXCEPT COMPRESSOR

After replacing any of the following major components, add the correct amount of lubricant to the system.
Amount of lubricant to be added

Part replaced	Lubricant to be added to system	Remarks
	Amount of lubricant mℓ (Imp fl oz)	
Evaporator	75 (2.6)	-
Condenser	35 (1.2)	-
Liquid tank	10 (0.4)	-
In case of refrigerant leak	30 (1.1)	Large leak
	-	Small leak *1

*1: If refrigerant leak is small, no addition of lubricant is needed.

LUBRICANT ADJUSTING PROCEDURE FOR COMPRESSOR REPLACEMENT

1. Before connecting recovery/recycling recharging equipment to vehicle, check recovery/recycling recharging equipment gauges. No refrigerant pressure should be displayed. If NG, recover refrigerant from equipment lines.
2. Connect recovery/recycling recharging equipment to vehicle. Confirm refrigerant purity in supply tank using recovery/recycling recharging equipment and refrigerant identifier. If NG, refer to MTC-5, "CONTAMINATED REFRIGERANT" .
3. Confirm refrigerant purity in vehicle A/C system using recovery/recycling recharging equipment and refrigerant identifier. If NG, refer to MTC-5, "CONTAMINATED REFRIGERANT" .
4. Discharge refrigerant into the refrigerant recovery/recycling equipment. Measure lubricant discharged into the recovery/recycling equipment.
5. Drain the lubricant from the old (removed) compressor into a graduated container and recover the amount of lubricant drained.
6. Drain the lubricant from the new compressor into a separate, clean container.
7. Measure an amount of new lubricant installed equal to amount drained from old compressor. Add this lubricant to new compressor through the suction port opening.
8. Measure an amount of new lubricant equal to the amount recovered during discharging. Add this lubricant to new compressor through the suction port opening.
9. If the liquid tank also needs to be replaced, add another 5 mℓ (0.2 Imp fl oz) of lubricant at this time.
   Do not add this 5 mℓ (0.2 Imp fl oz) of lubricant only when replaces the compressor.

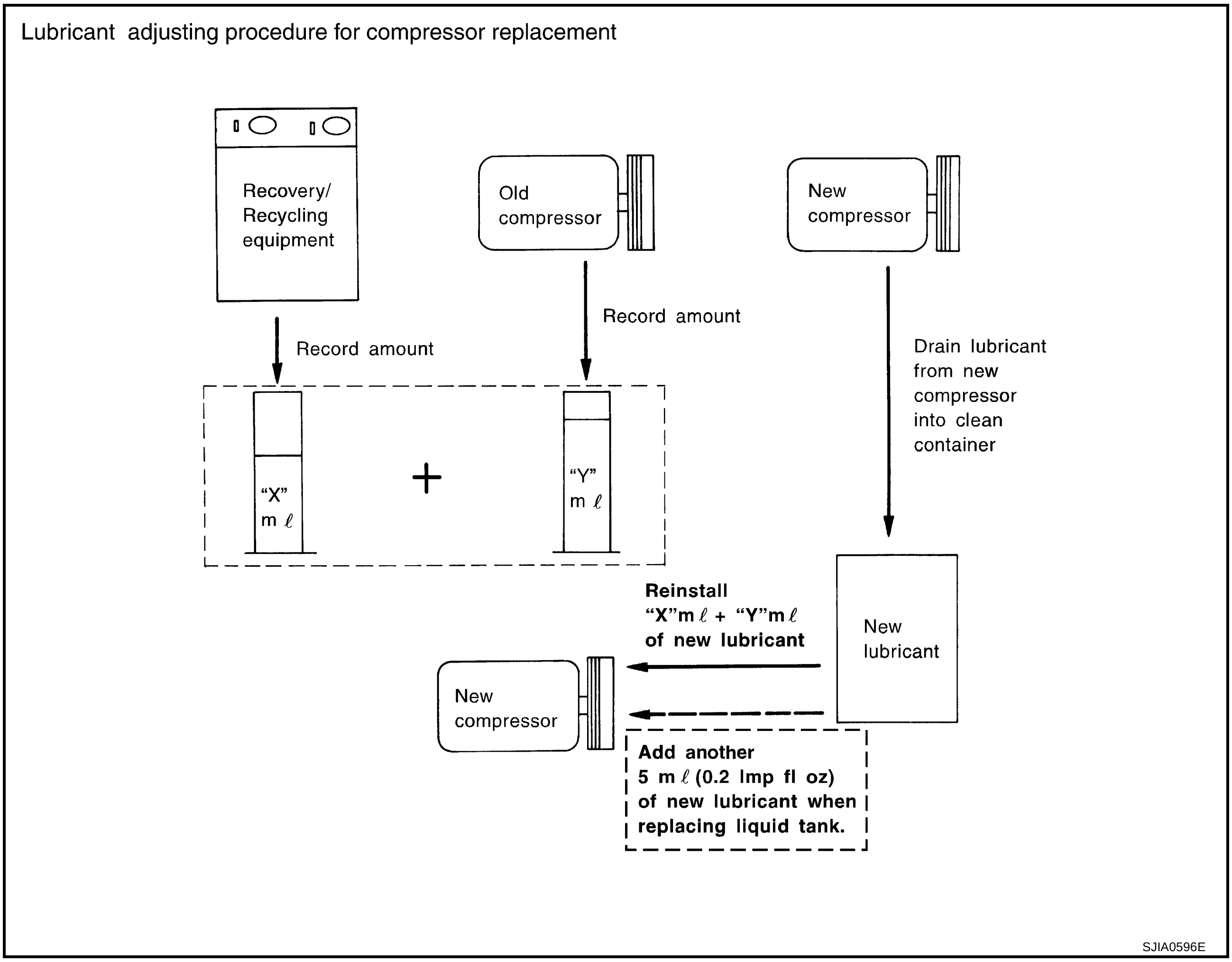
Lubricant adjusting procedure for compressor replacement
Recovery/ Recycling equipment
Old compressor
New compressor
Record amount
Record amount
Drain lubricant from new compressor into clean container
"X" m ℓ
+
"Y" m ℓ
Reinstall "X"m ℓ + "Y"m ℓ of new lubricant
New lubricant
New compressor
Add another 5 m ℓ (0.2 Imp fl oz) of new lubricant when replacing liquid tank.
SJIA0596E

AIR CONDITIONER CONTROL

PFP:27500

Control Operation

AJS001ML

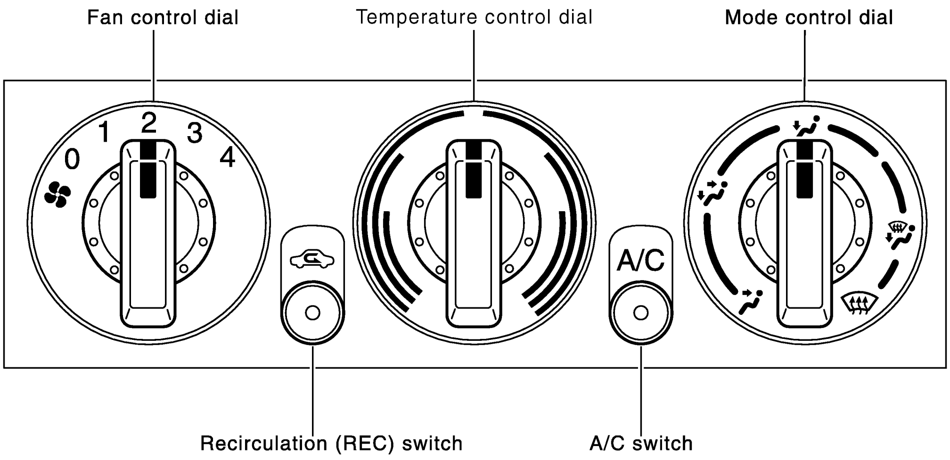

FAN CONTROL DIAL

This dial turns the fan ON and OFF, and controls fan speed.

TEMPERATURE CONTROL DIAL

This dial is you to adjust the temperature of the discharge air.

MODE CONTROL DIAL

This dial controls the outlet air flow.

RECIRCULATION (REC) SWITCH

Recirculation (REC) position: Interior air is recirculated inside the vehicle. (The indicator lamp will illuminate.)
Fresh (FRE) position: Outlet air is drawn into the passenger compartment. (The indicator lamp will not illuminate.)

A/C SWITCH

The A/C switch controls the air conditioner system. When the switch is depressed with the fan ON, the compressor will turn ON. The indicator lamp will also illuminates.
The air conditioner cooling function operates only when the engine is running.

Discharge Air Flow

AJS001MM

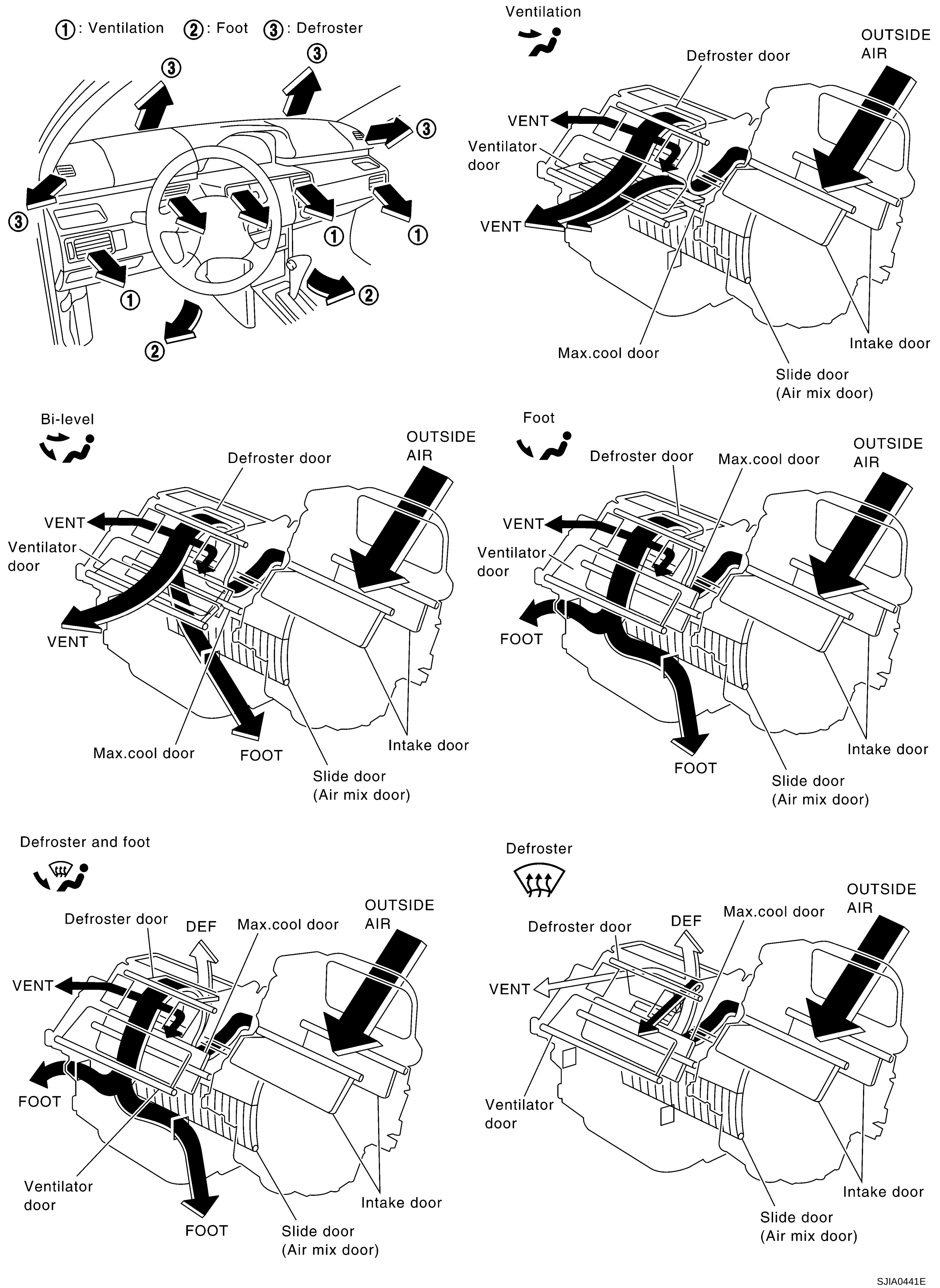

System Description

AJS001MN

SWITCHES AND THEIR CONTROL FUNCTION

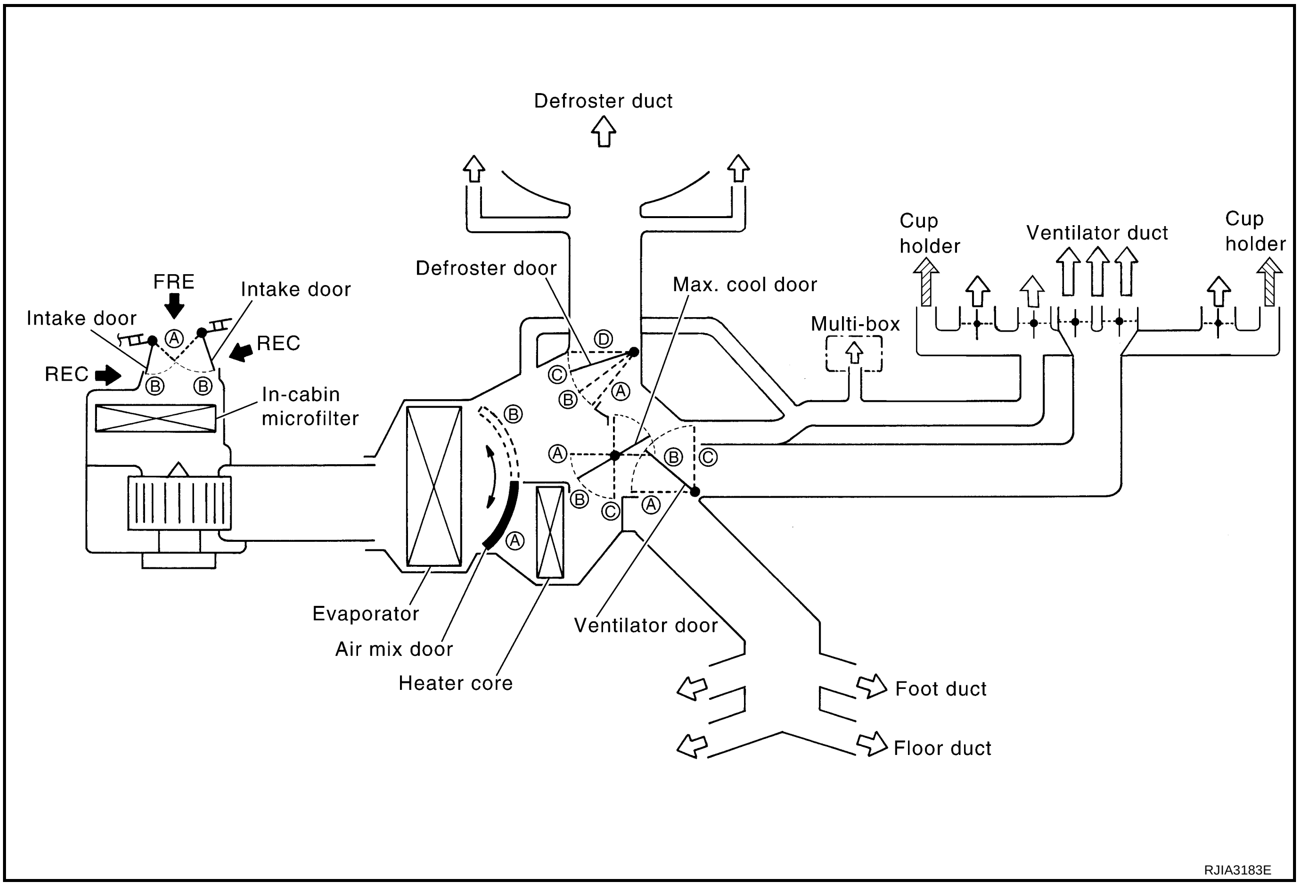

Door	Mode control dial	MODE position						REC SW		Temperature control dial		
	D/F*	VENT	B/L	FOOT	D/F*	D/F	DEF	REC	FRE			
					Not displayed					Full cold	↔	Full hot
Ventilator door		Ⓐ	Ⓑ	Ⓒ	Ⓒ	Ⓒ	Ⓒ	—		—		
Max.cool door		Ⓐ	Ⓑ	Ⓑ	Ⓑ	Ⓑ	Ⓒ	—		—		
Defroster door		Ⓓ	Ⓓ	Ⓓ	Ⓒ	Ⓑ	Ⓐ	—		—		
Intake door	—							Ⓐ	Ⓑ	—		
Air mix door	—							—		Ⓐ	Ⓐ~Ⓑ	Ⓑ

RJIA0701E

TROUBLE DIAGNOSIS

PFP:00004

How to Perform Trouble Diagnoses for Quick and Accurate Repair

AJS001MO

WORK FLOW

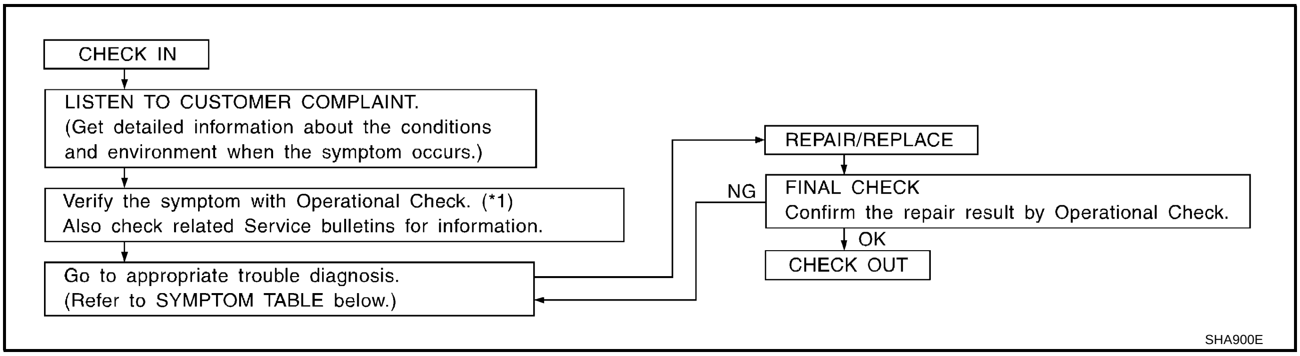

*1 MTC-36, "Operational Check"

SYMPTOM TABLE

Symptom	Reference Page	
Air outlet does not change.	Go to Trouble Diagnosis Procedure for Mode Door.	MTC-37, "Mode Door"
Discharge air temperature does not change.	Go to Trouble Diagnosis Procedure for Air Mix Door.	MTC-38, "Air Mix Door"
Intake door does not change.	Go to Trouble Diagnosis Procedure for Intake Door Motor.	MTC-39, "Intake Door Motor Circuit"
Intake door motor does not operate normally.		
Blower motor operation is malfunctioning.	Go to Trouble Diagnosis Procedure for Blower Motor.	MTC-42, "Blower Motor Circuit"
Magnet clutch does not operate when A/C switch and fan switch are ON.	Go to Trouble Diagnosis Procedure for Magnet Clutch.	MTC-46, "Magnet Clutch Circuit"
Insufficient cooling	Go to Trouble Diagnosis Procedure for Insufficient Cooling.	MTC-52, "Insufficient Cooling"
Insufficient heating	Go to Trouble Diagnosis Procedure for Insufficient Heating.	MTC-59, "Insufficient Heating"
Noise	Go to Trouble Diagnosis Procedure for Noise.	MTC-60, "Noise"

Component Parts and Harness Connector Location

AJS001MP

ENGINE COMPARTMENT

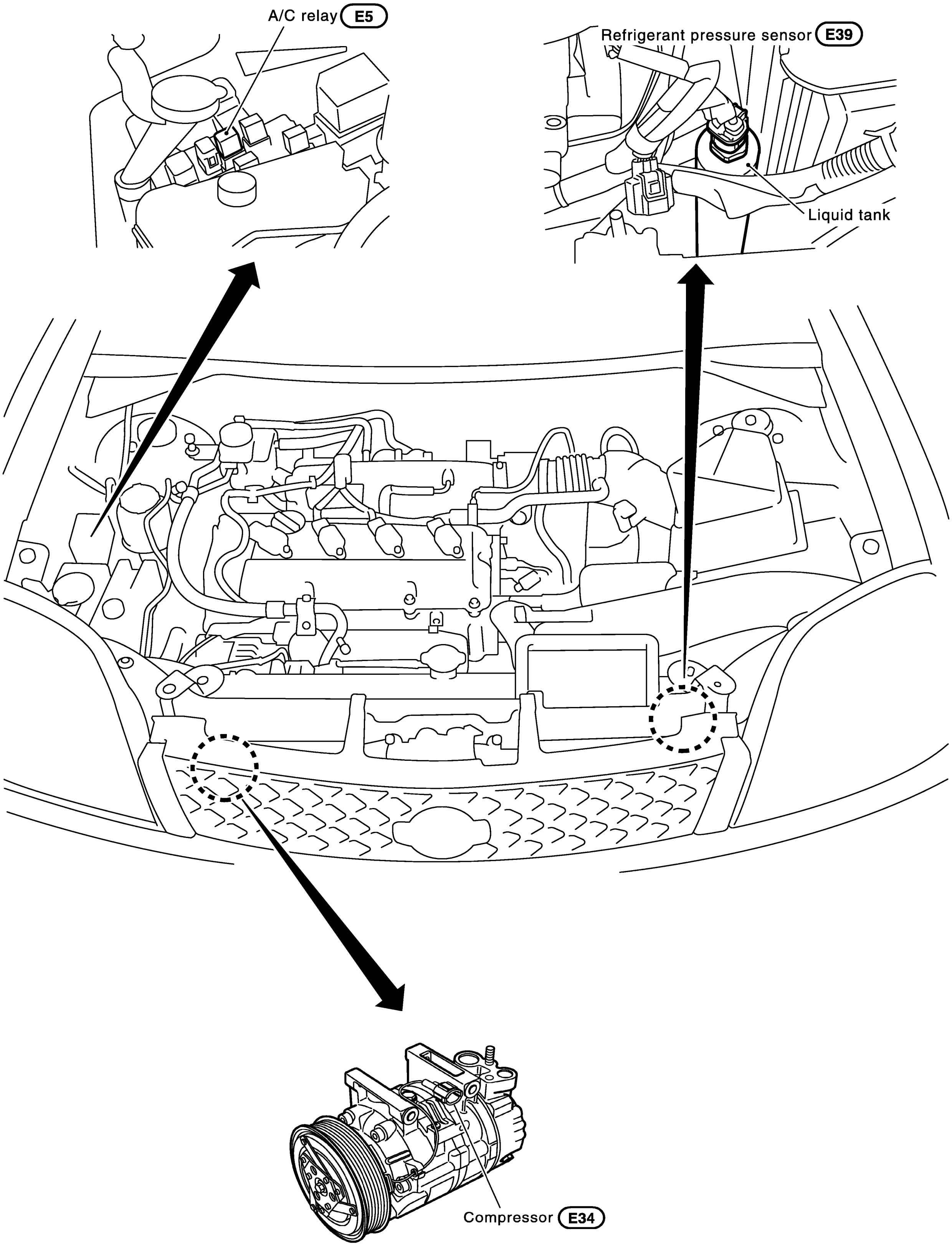

PASSENGER COMPARTMENT

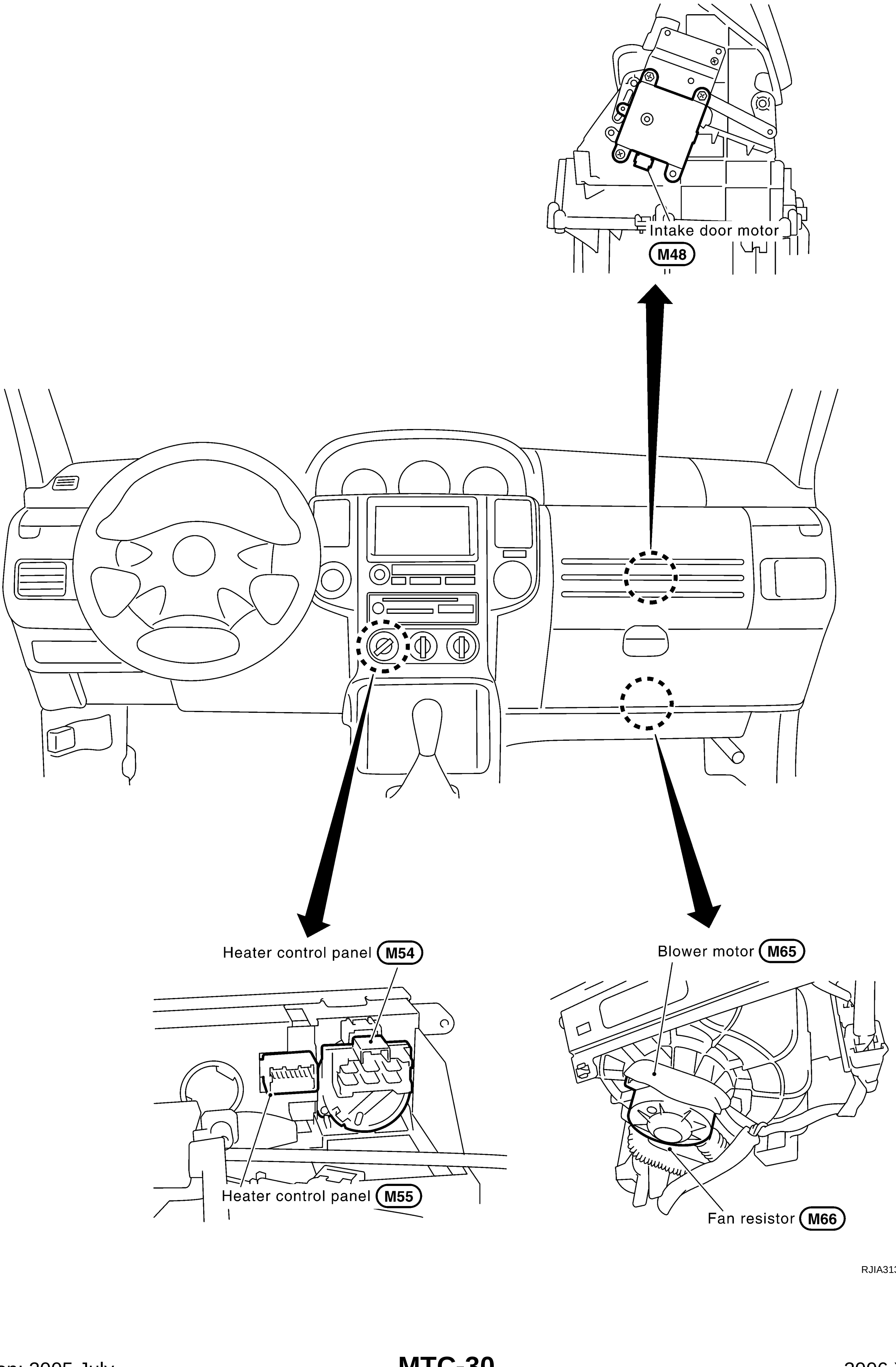

RJIA3134E

Schematic —A/C, M—

AJS001MQ

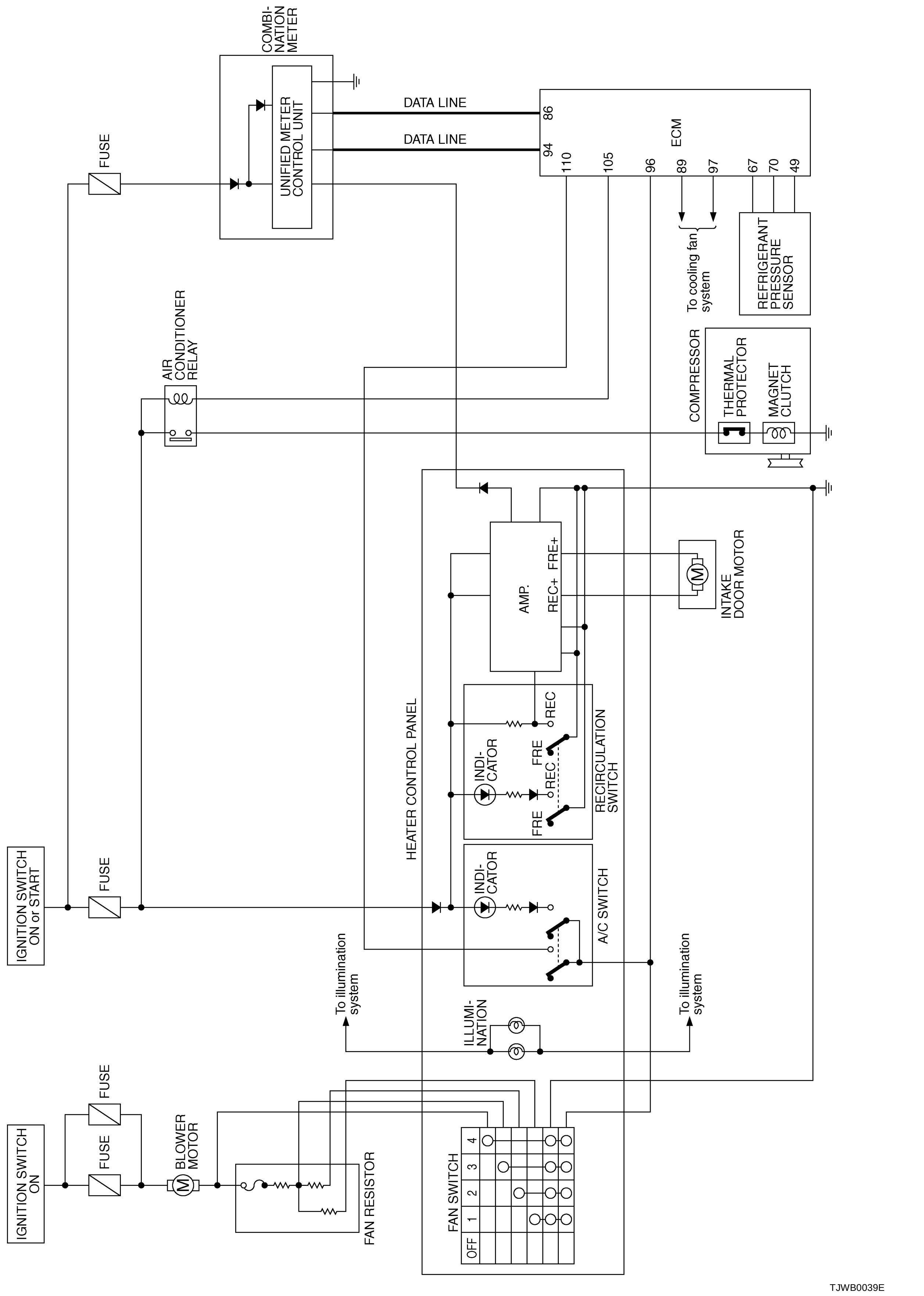

Wiring Diagram — A/C, M —

AJS001OB

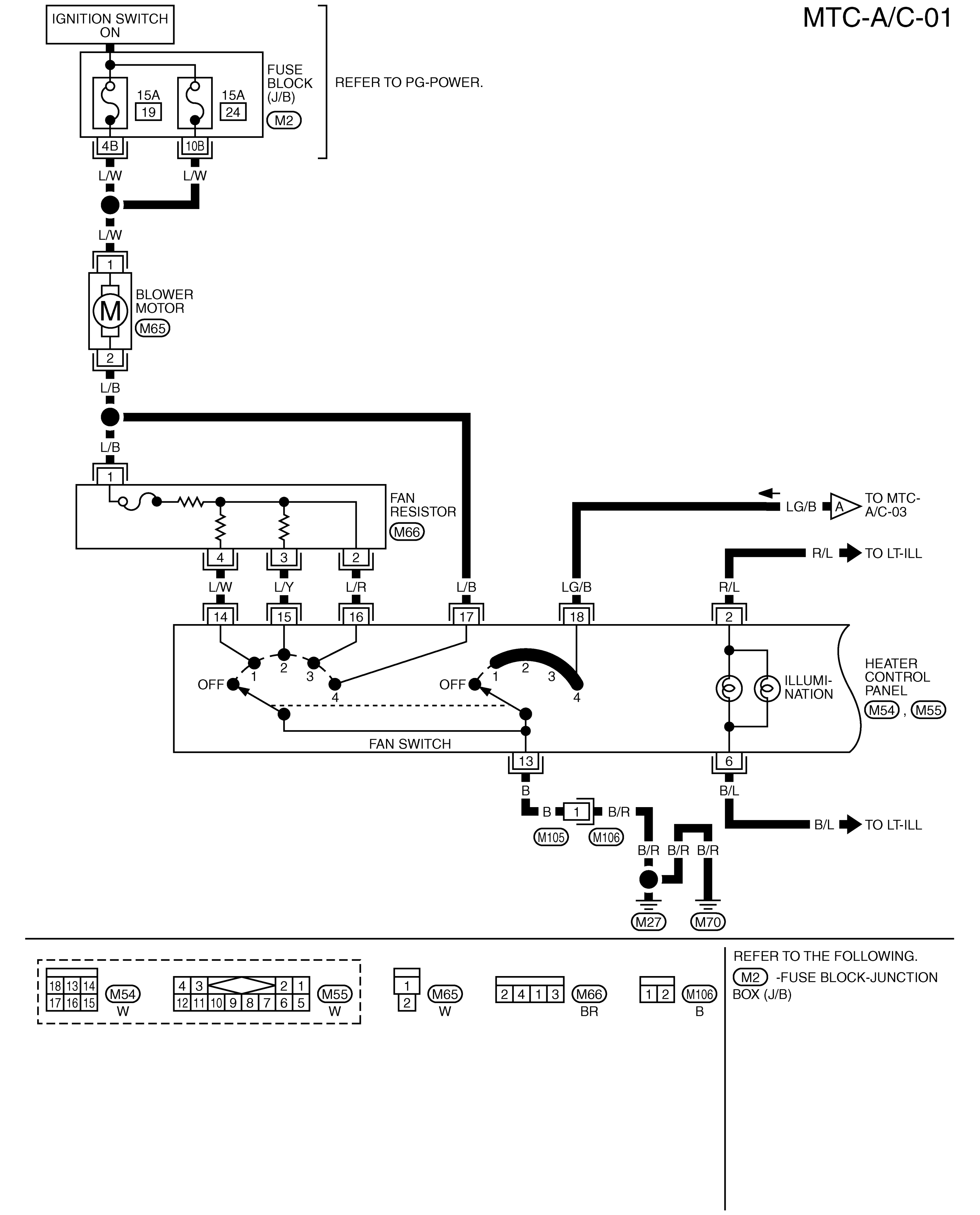

MTC-A/C-02

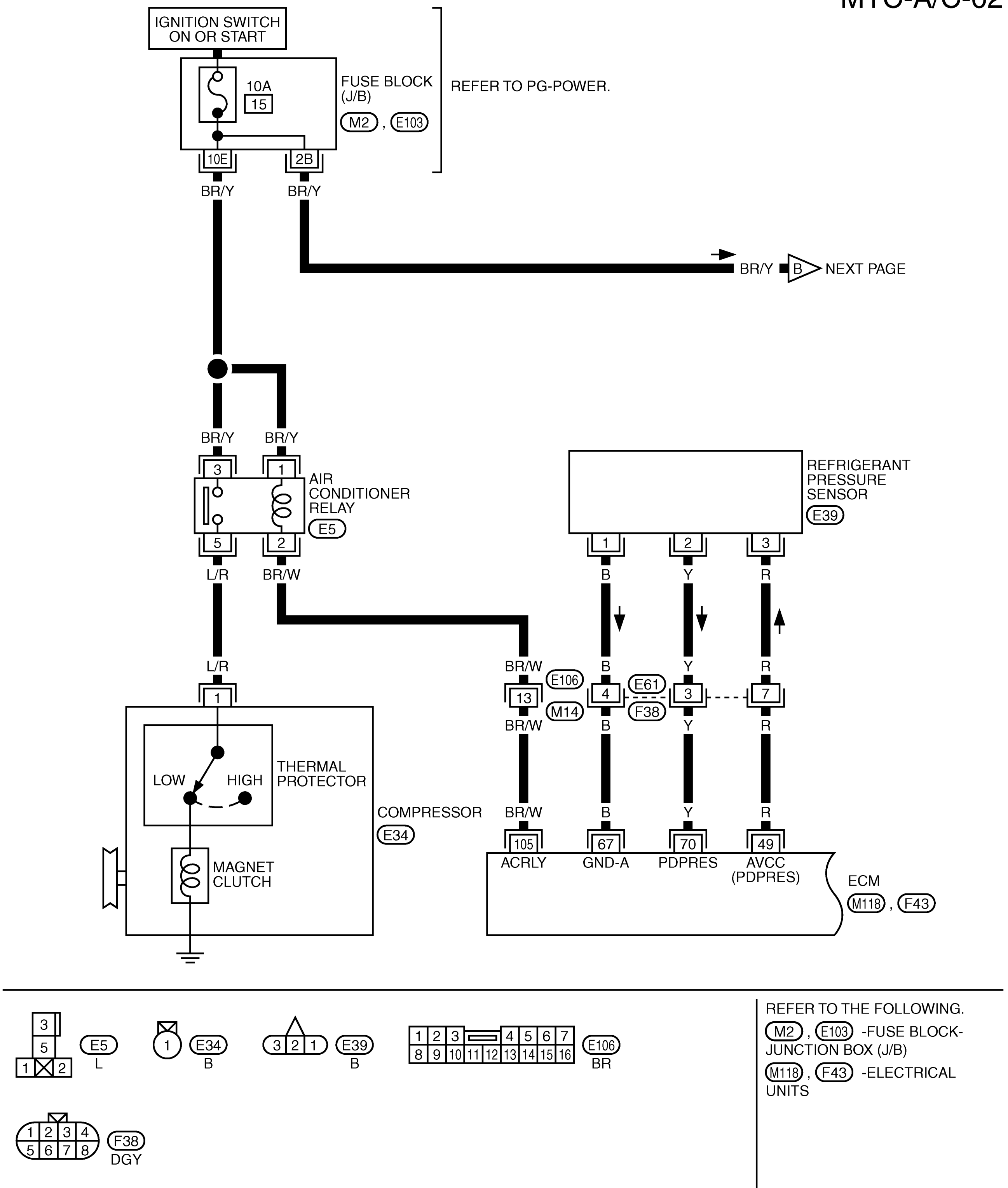

REFER TO THE FOLLOWING.

M2 , E103 -FUSE BLOCK-JUNCTION BOX (J/B)

M118 , F43 -ELECTRICAL UNITS

TJWB0041E

MTC-A/C-03

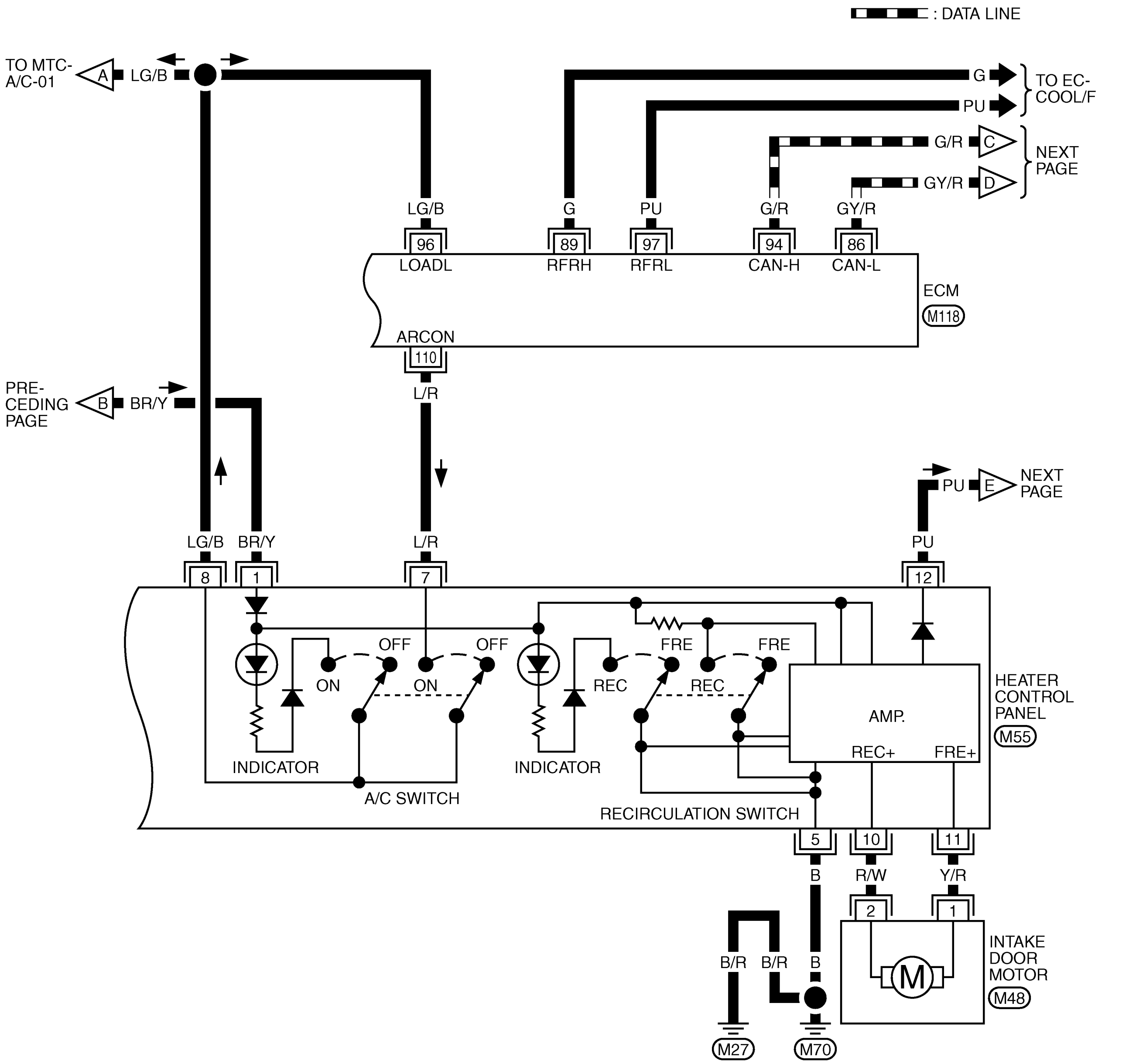

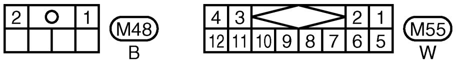

REFER TO THE FOLLOWING.
M118 -ELECTRICAL UNITS

TJWB0042E

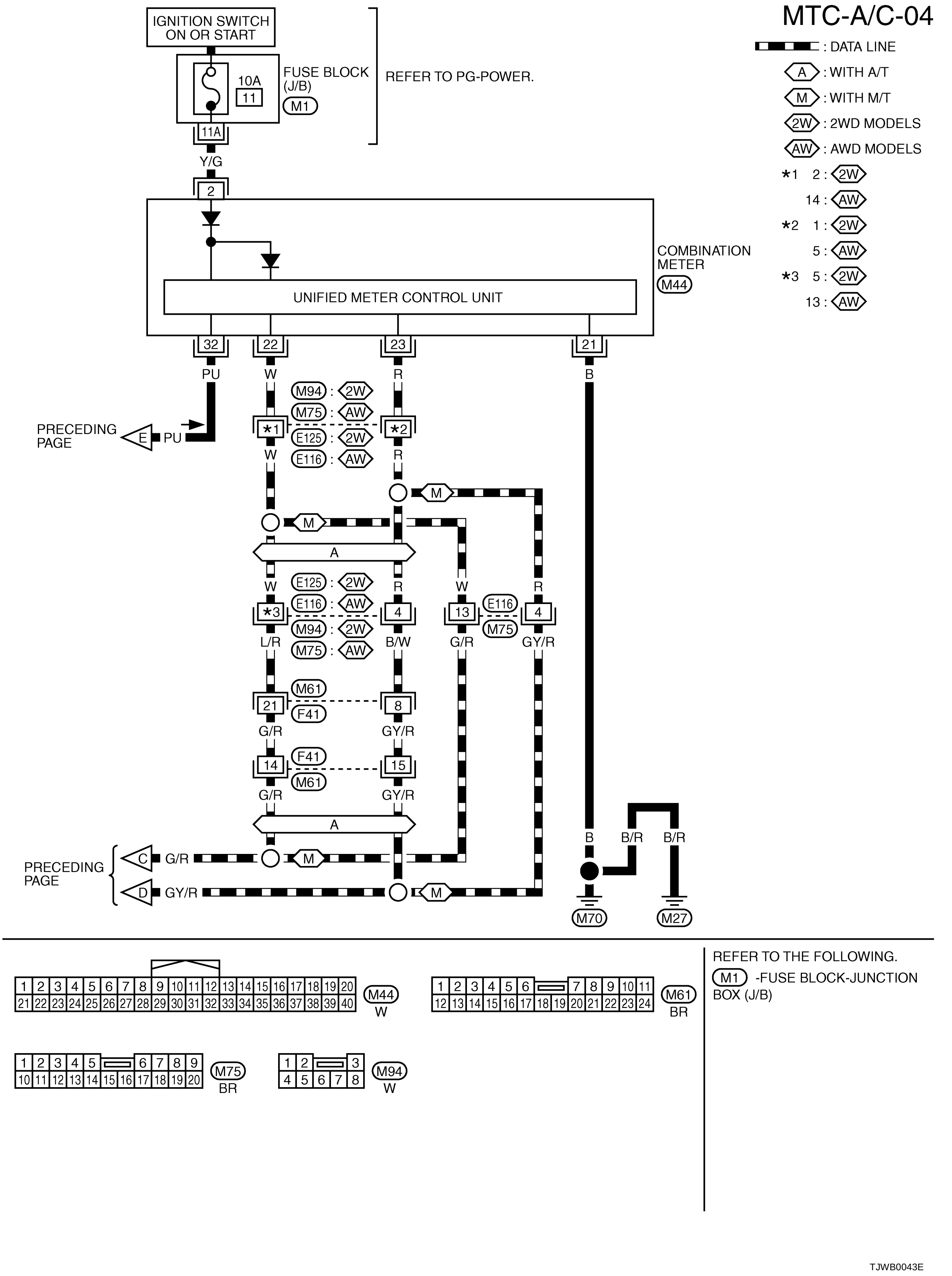
MTC-A/C-04
: DATA LINE
A : WITH A/T
M : WITH M/T
2W : 2WD MODELS
AW : AWD MODELS
*1 2 : 2W
14 : AW
*2 1 : 2W
5 : AW
*3 5 : 2W
13 : AW
IGNITION SWITCH ON OR START
10A
11
FUSE BLOCK (J/B)
M1
REFER TO PG-POWER.
11A
Y/G
2
COMBINATION METER
M44
UNIFIED METER CONTROL UNIT
32
22
23
21
PU
W
R
B
PRECEDING PAGE
E
M94 : 2W
M75 : AW
E125 : 2W
E116 : AW
*1
*2
A
*3
4
13
E116
M75
L/R
B/W
G/R
GY/R
M61
F41
21
8
14
15
B/R
C
D
M70
M27
REFER TO THE FOLLOWING.
M1 -FUSE BLOCK-JUNCTION BOX (J/B)
BR
TJWB0043E

Operational Check

AJS001MS

The purpose of the operational check is to confirm that the system operates properly.

Conditions : Engine running at usual operating temperature

CHECKING BLOWER

1. Turn fan control dial to 1-speed. Blower should operate on low speed.
2. Then turn fan control dial to 2-speed, and continue checking blower speed until all speeds are checked.
3. Leave blower on Max. speed.

If NG, go to trouble diagnosis procedure for MTC-42, "Blower Motor Circuit" .
If OK, continue the check.

CHECKING DISCHARGE AIR

1. Turn mode control dial to each position.
2. Confirm that discharge air comes out according to the air distribution table. Refer to MTC-26, "Discharge Air Flow" .

If NG, go to trouble diagnosis procedure for MTC-37, "Mode Door" .
If OK, continue the check.

Discharge air flow

Mode door position	Air outlet/distribution		
	Vent	Foot	Defroster
	100%	–	–
	50%	50%	–
	24%	76%	–
	18%	54%	28%
	20%	–	80%

RJIA0492E

CHECKING INTAKE AIR

1. Press REC switch. Recirculation indicator should illuminate.
2. Press REC switch again. Recirculation indicator should not illuminate.
3. Listen for intake door position change (slight change of blower sound can be heard).

If NG, go to trouble diagnosis procedure for MTC-39, "Intake Door Motor Circuit" .
If OK, continue the check.

CHECKING TEMPERATURE DECREASE

1. Turn temperature control dial counterclockwise until full cold position.
2. Check for cold air at discharge air outlets.

If NG, go to trouble diagnosis procedure for MTC-52, "Insufficient Cooling" .
If OK, continue the check.

CHECKING TEMPERATURE INCREASE

1. Turn temperature control dial clockwise until full hot position.
2. Check for hot air at discharge air outlets.

If NG, go to trouble diagnosis procedure for MTC-59, "Insufficient Heating" .
If OK, continue the check.

CHECKING A/C SWITCH

1. Turn fan control dial to the desired (1 to 4 speed) position.
2. Press A/C switch. Then A/C switch indicator turns ON.
   - Confirm that the compressor clutch engages (sound or visual inspection).

If NG, go to trouble diagnosis procedure for MTC-46, "Magnet Clutch Circuit" .
If all operational checks are OK (symptom cannot be duplicated), go to Incident Simulation Tests in GI-26, "How to Perform Efficient Diagnosis for an Electrical Incident" and perform tests as outlined to simulate driving conditions environment. If symptom appears, refer to MTC-28, "SYMPTOM TABLE" and perform applicable trouble diagnosis procedures.

Mode Door

AJS001MT

SYMPTOM: Air outlet does not change.

INSPECTION FLOW

1.Confirm symptom by performing the following operational check.

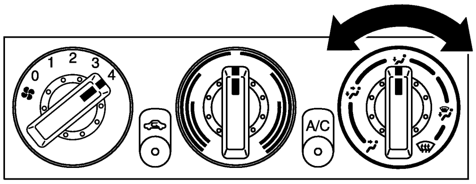

Discharge air flow

Mode door position	Air outlet/distribution		
	Vent	Foot	Defroster
	100%	–	–
	50%	50%	–
	24%	76%	–
	18%	54%	28%
	20%	–	80%

OPERATIONAL CHECK – Mode door

a. Turn the mode control dial to each position.

b. Confirm that discharge air comes out according to the distribution table at left.
Refer to “Discharge Air Flow”(*1).

Note:
If OK (symptom cannot be duplicated), perform complete operational check (*2).
If NG (symptom is confirmed), continue with STEP-2 following.

↓

2. Check for any service bulletins.

↓

3. Check mode door control cable. (*3)

↓ OK

4. If the symptom still exists, perform a complete operational check (*2) and check for other symptoms. [Refer to symptom table, (*4).] Does another symptom exist?

→ YES: Go to Trouble Diagnosis for related symptom. **[Another symptom exists.]**

↓ NO

INSPECTION END

RJIA3141E

*1 MTC-26, "Discharge Air Flow"

*2 MTC-36, "Operational Check"

*3 MTC-71, "Mode Door Cable Adjustment"

*4 MTC-28, "SYMPTOM TABLE"

Air Mix Door

AJS001MU

SYMPTOM: Air mix door does not change.

INSPECTION FLOW

1. Confirm symptom by performing the following operational check.

OPERATIONAL CHECK

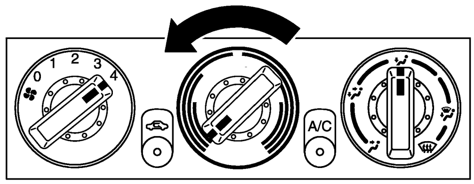

Temperature Decrease

a. Turn temperature control dial counterclockwise until full cold position.

b. Check for cold air at discharge air outlets.

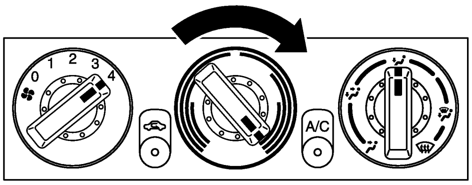

Temperature Increase

a. Turn temperature control dial clockwise until full hot position.

b. Check for hot air at discharge air outlets.

If OK (symptom cannot be duplicated). Perform complete operational check (*1).
If NG (symptom is confirmed), continue with STEP-2 following.

↓

2. Check for any service bulletins.

↓

3. Check air mix door control cable (*2).

OK ↓

If the symptom still exists, perform a complate operational check (*1) and check for other symptoms.
[Refer to symptom table (*3).]
Does another symptom exist?

- YES → Go to Trouble Diagnosis for related symptom. **[Another symptom exists.]**
- NO → INSPECTION END

RJIA3142E

*1 MTC-36, "Operational Check"   *2 MTC-72, "Air Mix Door Cable Adjustment"   *3 MTC-28, "SYMPTOM TABLE"

Intake Door Motor Circuit

AJS001MV

SYMPTOM:

- Intake door does not change.
- Intake door motor does not operate normally.

INSPECTION FLOW

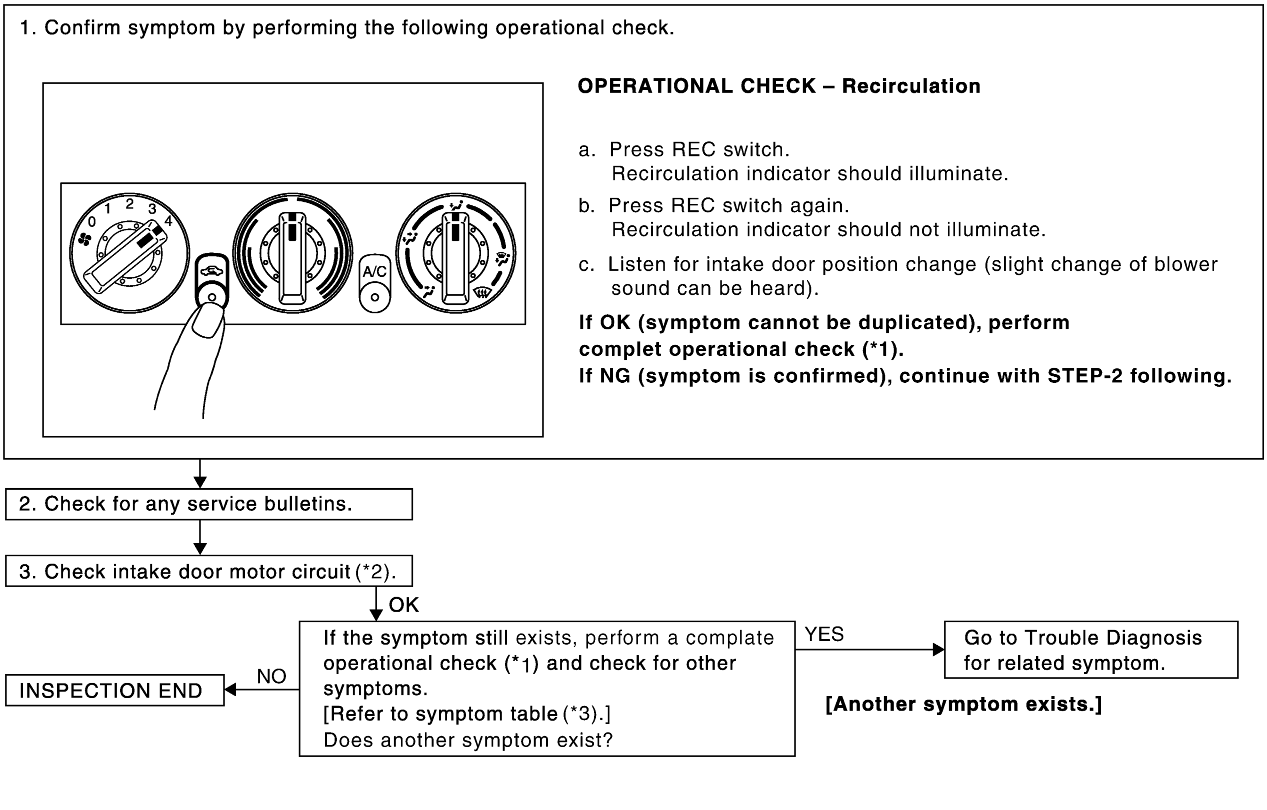

SJIA1108E

*1 MTC-36, "Operational Check" *2 MTC-39, "Intake Door Motor Circuit" *3 MTC-28, "SYMPTOM TABLE"

COMPONENT DESCRIPTION

Intake Door Motor

The intake door motor is attached to the intake unit. It rotates so that air is drawn from inlets set by the heater control panel. Motor rotation is conveyed to a lever which activates the intake door.

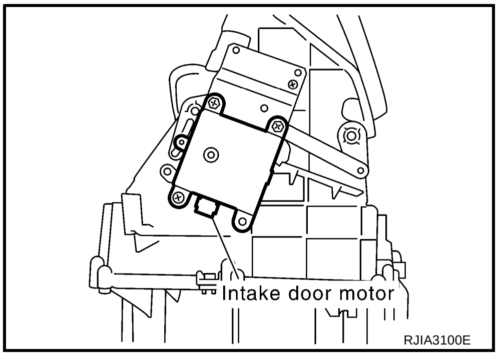

RJIA3100E

DIAGNOSIS PROCEDURE FOR INTAKE DOOR MOTOR

SYMPTOM: Intake door does not operate normally.

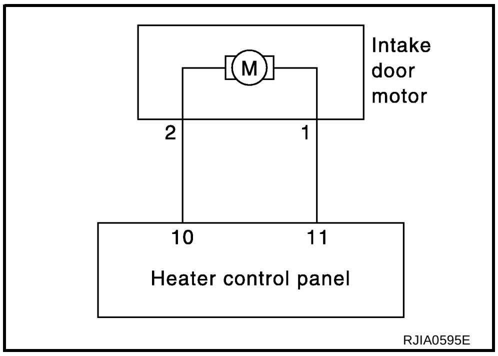

1. CHECK POWER SUPPLY FOR HEATER CONTROL PANEL

1. Disconnect heater control panel connector.
2. Turn ignition switch ON.
3. Check voltage between heater control panel harness connector M55 terminal 1.

1 – Ground : Battery voltage

OK or NG

OK >> GO TO 2.

NG >> Check power supply circuit and 10 A fuse [No. 15, located in the fuse block (J/B)]. Refer to PG-51, "FUSE BLOCK - JUNCTION BOX (J/B)" .

- If fuse is OK, check harness for open circuit. Repair or replace if necessary.
- If fuse is NG, replace fuse and check harness for short circuit. Repair or replace if necessary.

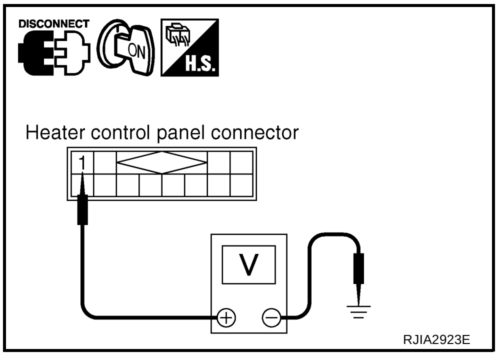

2. CHECK GROUND CIRCUIT FOR HEATER CONTROL PANEL

1. Turn ignition switch OFF.
2. Check continuity between heater control panel harness connector M55 terminal 5.

5 – Ground : Continuity should exist.

OK or NG

OK >> GO TO 3.

NG >> Repair harness or connector.

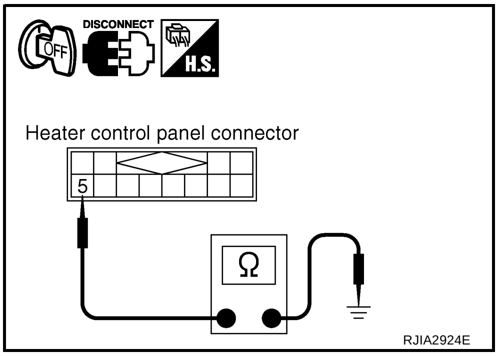

3. CHECK RECIRCULATION SWITCH CIRCUIT

1. Press REC (recirculation) switch.
2. Check continuity between heater control panel harness connector M55 terminal 1 and 5.

1 – 5 : Continuity should exist.

OK or NG

OK >> GO TO 4.

NG >> Replace heater control panel.

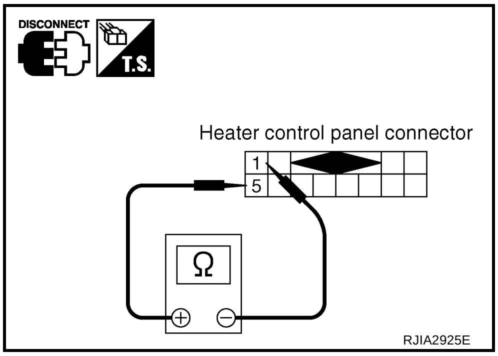

4. CHECK POWER SUPPLY FOR INTAKE DOOR MOTOR

1. Reconnect heater control panel connector.
2. Turn ignition switch ON.
3. Check voltage between intake door motor harness connector M48 terminal 1 and 2.

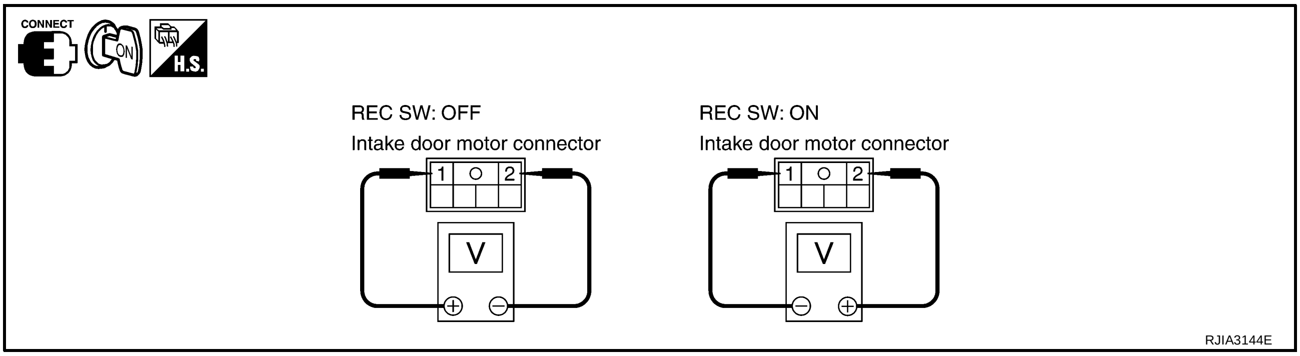

Terminals				Condition	Voltage
(+)		(–)			
Intake door motor connector	Terminal No.	Intake door motor connector	Terminal No.		
M48	2	M48	1	REC SW: ON	Approx. 12V
M48	1	M48	2	REC SW: OFF	

OK or NG

OK >> Replace intake door motor.
NG >> GO TO 5.

5. CHECK CIRCUIT CONTINUITY BETWEEN HEATER CONTROL PANEL AND INTAKE DOOR MOTOR

1. Turn ignition switch OFF.
2. Disconnect the heater control panel connector and intake door motor connector.
3. Check continuity between heater control panel harness connector M55 terminal 10, 11 and intake door motor harness connector M48 terminal 2, 1.

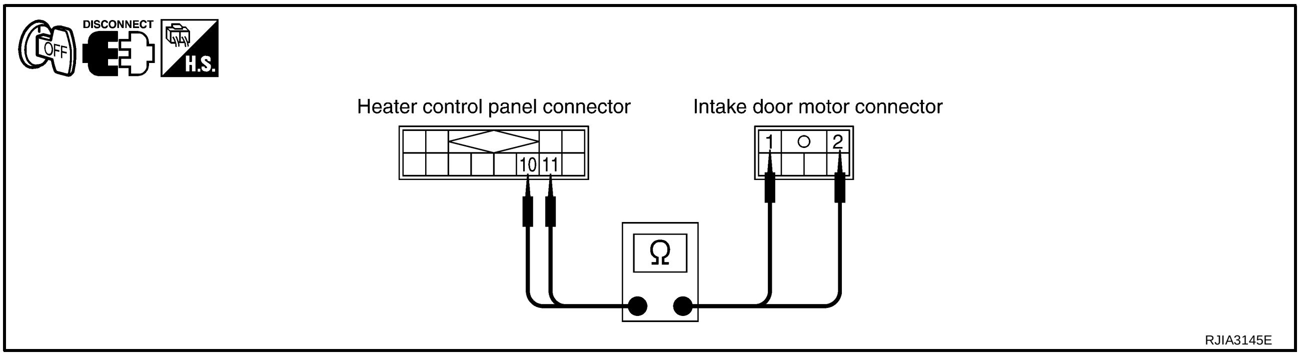

10 – 2 : Continuity should exist.
11 – 1 : Continuity should exist.

OK or NG

OK >> Replace heater control panel.
NG >> Repair harness or connector.

Blower Motor Circuit

AJS001MW

SYMPTOM: Blower motor operation is malfunctioning.

INSPECTION FLOW

1. Confirm symptom by performing the following operational check.

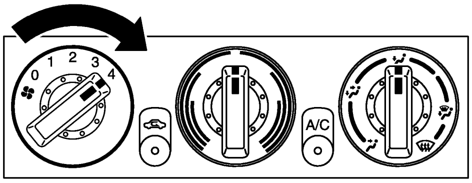

OPERATIONAL CHECK – Blower motor

a. Turn fan control dial to 1-speed.
Blower should operate on low speed.
b. Then turn fan control dial to 2-speed, and continue checking blower speed until all four speeds are checked.

If OK (symptom cannot be duplicated), perform complete operational check (*1).
If NG (symptom is confirmed), continue with STEP-2 following.

2. Check for any service bulletins.

3. Check blower motor circuit (*2).

OK ↓

If the symptom still exists, perform a complete operational check (*1) and check for other symptoms.
[Refer to symptom table (*3).]
Does another symptom exist?

YES → Go to Trouble Diagnosis for related symptom. **[Another symptom exists.]**

NO → INSPECTION END

RJIA3146E

*1 MTC-36, "Operational Check"   *2 MTC-42, "DIAGNOSIS PROCEDURE FOR BLOWER MOTOR"   *3 MTC-28, "SYMPTOM TABLE"

DIAGNOSIS PROCEDURE FOR BLOWER MOTOR

SYMPTOM: Blower motor operation is malfunctioning.

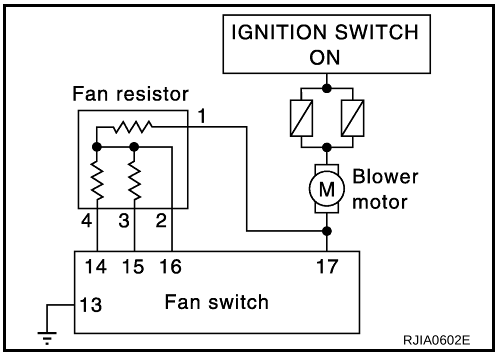

1. CHECK POWER SUPPLY FOR BLOWER MOTOR

1. Disconnect blower motor connector.
2. Turn ignition switch ON.
3. Check voltage between blower motor harness connector M65 terminal 1 and ground.

1 – Ground : Battery voltage

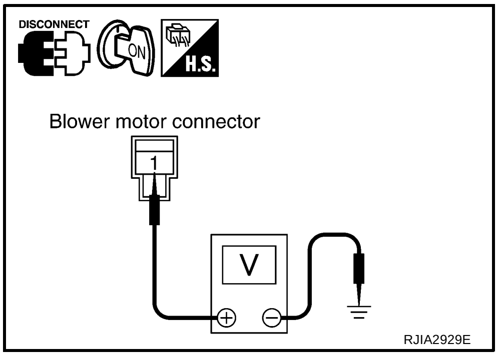

OK or NG

OK >> GO TO 2.
NG >> Check power supply circuit and 15 A fuses [Nos. 19 and 24, located in the fuse block (J/B)]. Refer to PG-51, "FUSE BLOCK - JUNCTION BOX (J/B)" .

- If fuses are OK, check harness for open circuit. Repair or replace if necessary.
- If fuses are NG, replace fuse and check harness for short circuit. Repair or replace if necessary.

2. CHECK GROUND CIRCUIT FOR BLOWER MOTOR

1. Turn ignition switch OFF.
2. Turn fan control dial to 1-speed.
3. Check continuity between blower motor harness connector M65 terminal 2 and ground.

2 – Ground : Continuity should exist.

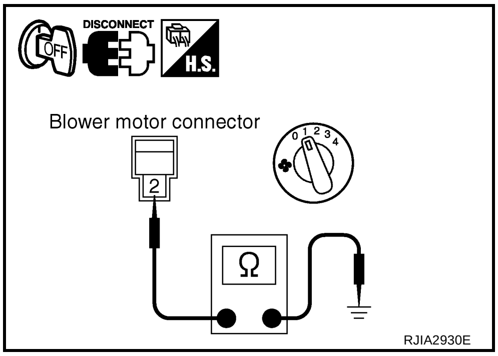

OK or NG

OK >> GO TO 3.
NG >> GO TO 4.

3. CHECK BLOWER MOTOR

Refer to MTC-45, "Blower Motor" .

OK or NG

OK >> INSPECTION END
NG >> Replace blower motor.

4. CHECK CIRCUIT CONTINUITY BETWEEN BLOWER MOTOR AND FAN RESISTOR

1. Disconnect fan resistor connector.
2. Check continuity between fan resistor harness connector M66 terminal 1 and blower motor harness connector M65 terminal 2.

1 – 2 : Continuity should exist.

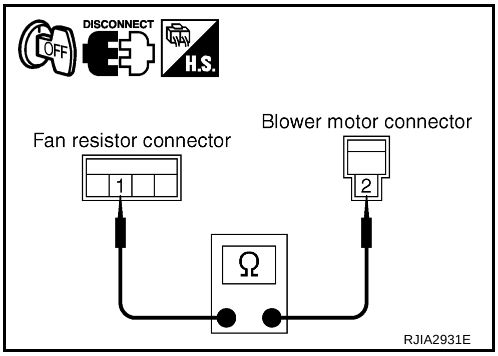

OK or NG

OK >> GO TO 5.
NG >> Repair harness or connector.

5. CHECK FAN RESISTOR

Refer to MTC-45, "Fan Resistor" .

OK or NG

OK >> GO TO 6.
NG >> Replace fan resistor.

6. CHECK CIRCUIT CONTINUITY BETWEEN FAN RESISTOR AND HEATER CONTROL PANEL

1. Disconnect heater control panel connector.
2. Check continuity between fan resistor harness connector M66 terminal 2, 3 or 4 and heater control panel harness connector M54 terminal 16, 15 or 14.

2 – 16 : Continuity should exist.
3 – 15 : Continuity should exist.
4 – 14 : Continuity should exist.

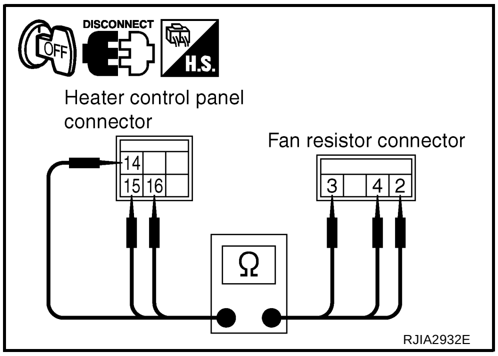

OK or NG

OK >> GO TO 7.
NG >> Repair harness or connector.

7. CHECK CIRCUIT CONTINUITY BETWEEN BLOWER MOTOR AND HEATER CONTROL PANEL

Check continuity between blower motor harness connector M65 terminal 2 and heater control panel harness connector M54 terminal 17.

2 – 17 : Continuity should exist.

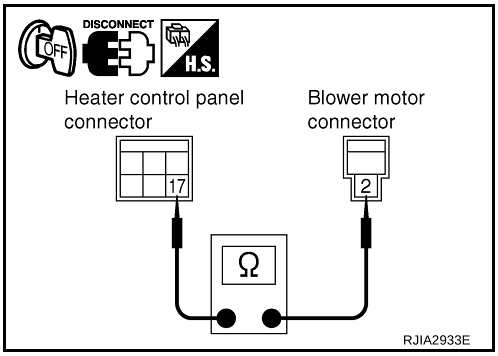

OK or NG

OK >> GO TO 8.
NG >> Repair harness or connector.

8. CHECK FAN SWITCH

Refer to MTC-45, "Fan Switch" .

OK or NG

OK >> GO TO 9.
NG >> Replace fan switch.

9. CHECK GROUND CIRCUIT

Check continuity between heater control panel harness connector M54 terminal 13 and ground.

13 – Ground : Continuity should exist.

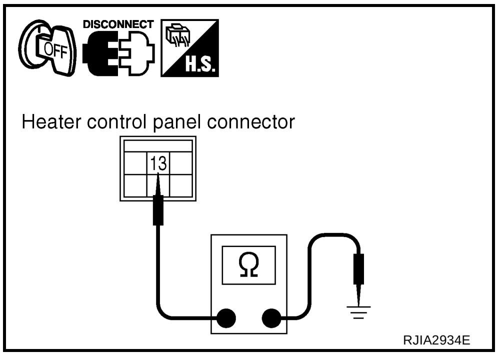

OK or NG

OK >> INSPECTION END
NG >> Repair harness or connector.

COMPONENT INSPECTION

Blower Motor

Confirm smooth rotation of the blower motor.

- Ensure that there are no foreign particles inside the blower unit.

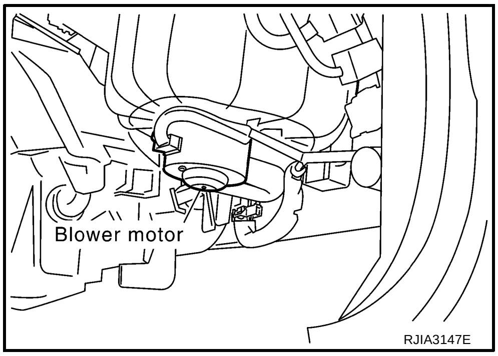

RJIA3147E

Fan Switch

Check continuity between heater control panel connector M54 terminals at each switch position.

Switch position	Terminals	Continuity
OFF	13 - 14, 15, 16, 17	No
1	13 - 14	Yes
2	13 - 15	
3	13 - 16	
4	13 - 17	

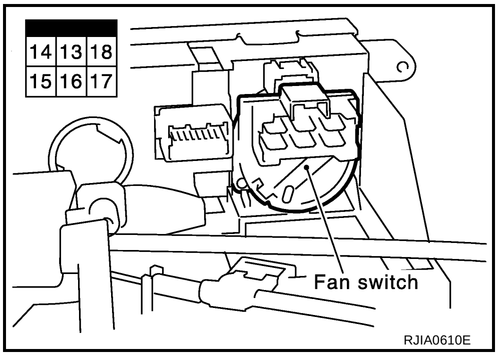

RJIA0610E

Fan Resistor

Check resistance between fan resistor connector M66 terminals.

Terminals		Resistance (Ω)
1	2	0.25 - 0.31
	3	0.58 - 0.70
	4	1.33 - 1.63

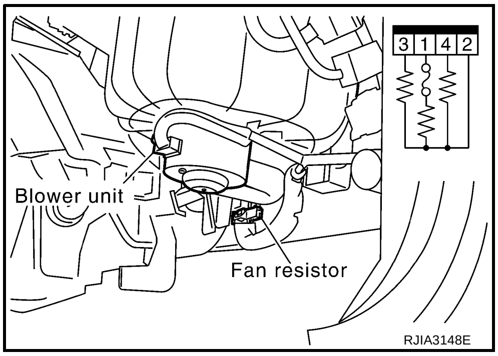

RJIA3148E

Magnet Clutch Circuit

AJS001MX

SYMPTOM: Magnet clutch does not operate when A/C switch and fan switch are ON.

INSPECTION FLOW

1. Confirm symptom by performing the following operational check.

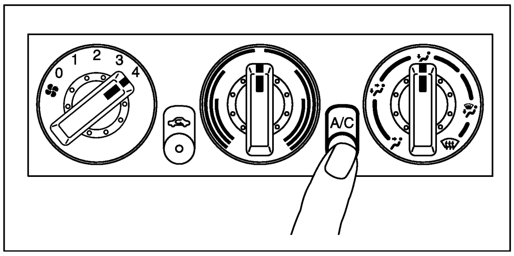

OPERATIONAL CHECK - A/C switch

a. Turn fan control dial to the desired (1 to 4-speed) position.
b. Press the A/C switch. Then A/C switch indicator turns ON.
   Confirm that the compressor clutch engages (sound or visual inspection).

If OK (symptom cannot be duplicated), perform complete operational check (*1).
If NG (symptom is confirmed), continue with STEP-2 following.

↓

2. Check for any service bulletins.

↓

3. Check compressor belt tension.
   Refer to (*2).

- NG → Adjust or replace compressor belt.
- OK ↓

4. Check refrigerant.
   Connect manifold gauge then check system pressure.

- NG → Check for refrigerant leaks. Refer to (*5).
- OK ↓

5. Check magnet clutch circuit (*3).

- OK ↓

If the symptom still exists, perform a complete Operational check (*1) and check for other symptoms.
[Refer to symptom table (*4).]
Does another symptom exist?

- YES → Go to Trouble Diagnosis for related symptom. **[Another symptom exists.]**
- NO → INSPECTION END

SJIA1102E

*1 MTC-36, "Operational Check"

*2 EM-11, "Checking Drive Belt"

*3 MTC-47, "DIAGNOSIS PROCEDURE FOR MAGNET CLUTCH"

*4 MTC-28, "SYMPTOM TABLE"

*5 MTC-90, "Checking for Refrigerant Leaks"

DIAGNOSIS PROCEDURE FOR MAGNET CLUTCH

SYMPTOM: Magnet clutch does not engage when A/C switch and fan control dial are ON.

1. CHECK POWER SUPPLY FOR COMPRESSOR

1. Disconnect compressor connector.
2. Start the engine.
3. Turn fan control dial and A/C switch to ON.
4. Check voltage between compressor harness connector E34 terminal 1 and ground.

1 – Ground : Battery voltage

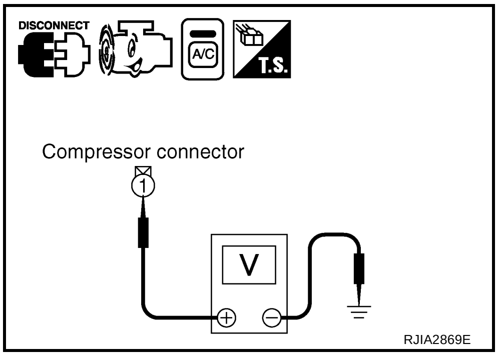

OK or NG

OK >> GO TO 2.
NG >> GO TO 3.

2. CHECK MAGNET CLUTCH CIRCUIT

Check for operation sound when applying battery voltage direct current to terminal.

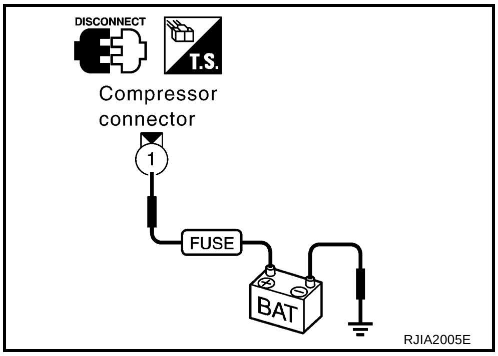

OK or NG

OK >> 1. Repair harness or connector.
2. Go to operational check. Refer to MTC-36, "CHECKING A/C SWITCH" . Confirm that magnet clutch operation is usual.

NG >> 1. Replace magnet clutch. Refer to MTC-82, "Removal and Installation of Compressor Clutch" .
2. Go to operational check. Refer to MTC-36, "CHECKING A/C SWITCH" . Confirm that magnet clutch operation is usual.

3. CHECK CIRCUIT CONTINUITY BETWEEN A/C RELAY AND COMPRESSOR

1. Turn ignition switch OFF.
2. Disconnect A/C relay connector.
3. Check continuity between A/C relay harness connector E5 terminal 5 and compressor harness connector E34 terminal 1.

5 – 1 : Continuity should exist.

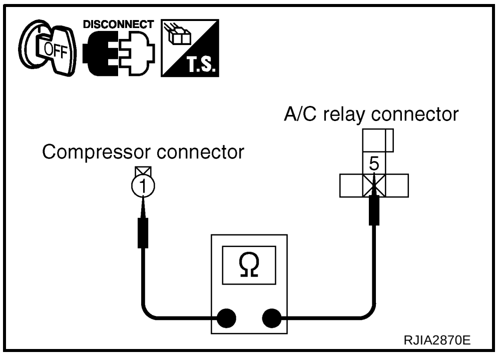

OK or NG

OK >> GO TO 4.
NG >> Repair harness or connector.

4. CHECK POWER SUPPLY FOR A/C RELAY

1. Turn ignition switch ON.
2. Check voltage between A/C relay harness connector E5 terminal 1 and ground, and also terminal 3 and ground.

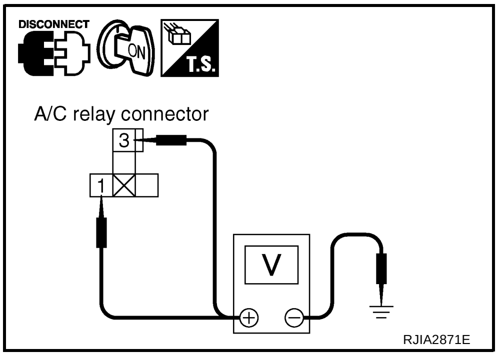

1 – Ground : Battery voltage
3 – Ground : Battery voltage

OK or NG

OK >> GO TO 5.
NG >> Check power supply circuit and 10 A fuse [No. 15 located in the fuse block (J/B)]. Refer to PG-51, "FUSE BLOCK - JUNCTION BOX (J/B)" .
- If fuse is OK, check harness for open circuit. Repair or replace if necessary.
- If fuse is NG, replace fuse and check harness for short circuit. Repair or replace if necessary.

5. CHECK A/C RELAY

Refer to MTC-51, "A/C Relay" .

OK or NG

OK >> GO TO 6.
NG >> Replace A/C relay.

6. CHECK COIL SIDE CIRCUIT OF A/C RELAY

1. Reconnect A/C relay connector.
2. Turn ignition switch ON.
3. Check voltage between ECM harness connector M118 terminal 105 and ground.

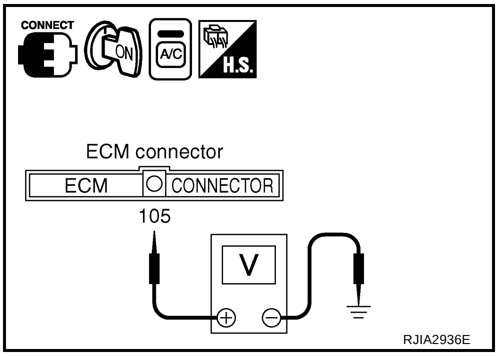

105 – Ground : Approx. 12 V

OK or NG

OK >> GO TO 8.
NG >> GO TO 7.

7. CHECK CIRCUIT CONTINUITY BETWEEN A/C RELAY AND ECM

1. Turn ignition switch OFF.
2. Disconnect A/C relay connector and ECM connector.
3. Check continuity between A/C relay connector E5 terminal 2 and ECM harness connector M118 terminal 105.

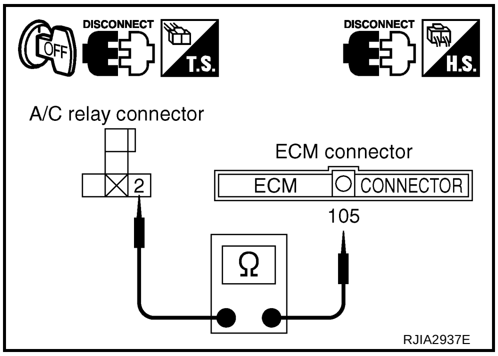

2 – 105 : Continuity should exist.

OK or NG

OK >> Check ECM. Refer to EC-104, "ECM Terminals and Reference Value" .
NG >> Repair harness or connector.

8. CHECK COMPRESSOR ON SIGNAL

Check voltage between heater control panel harness connector M55 terminal 7 and ground.

Terminals			Condition	Voltage
(+)		(−)		
Heater control panel connector	Terminal No.			
M55	7	Ground	A/C switch: ON (Blower motor operates.)	Approx. 0 V
			A/C switch: OFF	Approx. 5 V

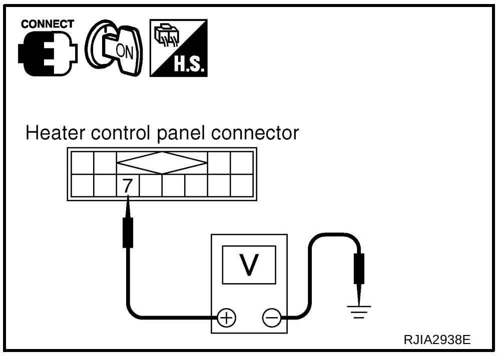

OK or NG

OK >> GO TO 9.
NG >> GO TO 15.

9. CHECK COMPRESSOR FEEDBACK SIGNAL

Check voltage between heater control panel harness connector M55 terminal 12 and ground.

12 – Ground : Approx. 0 V

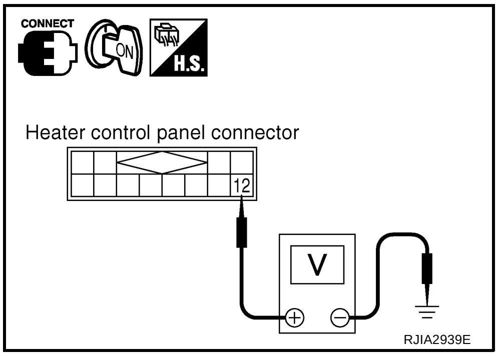

OK or NG

OK >> GO TO 10.
NG >> GO TO 16.

10. CHECK REFRIGERANT PRESSURE SENSOR

Refer to EC-634, "REFRIGERANT PRESSURE SENSOR" .

OK or NG

OK >> GO TO 11.
NG >> Replace refrigerant pressure sensor.

11. CHECK A/C SWITCH

1. Turn ignition switch OFF.
2. Disconnect heater control panel connector.
3. Press A/C switch.
4. Check continuity between heater control panel connector M55 terminal 7 and 8.

7 – 8 : Continuity should exist.

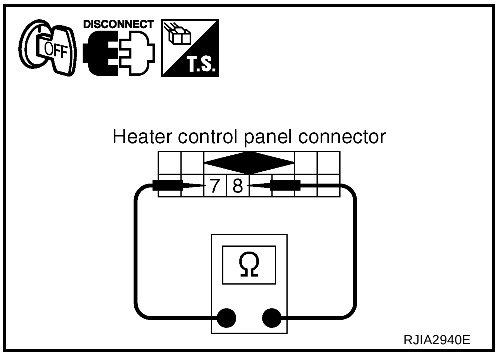

OK or NG

OK >> GO TO 12.
NG >> Replace heater control panel.

12. CHECK HEATER CONTROL PANEL CIRCUIT

Check continuity between heater control panel harness connector M55 terminal 8 and heater control panel harness connector M54 terminal 18.

8 – 18 : Continuity should exist.

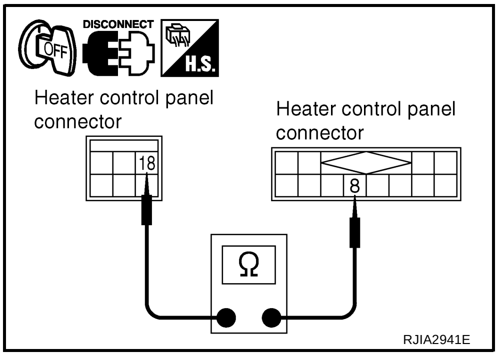

OK or NG

OK >> GO TO 13.
NG >> Repair harness or connector.

13. CHECK FAN SWITCH

Check continuity between heater control panel connector M54 terminal 18 and 13.

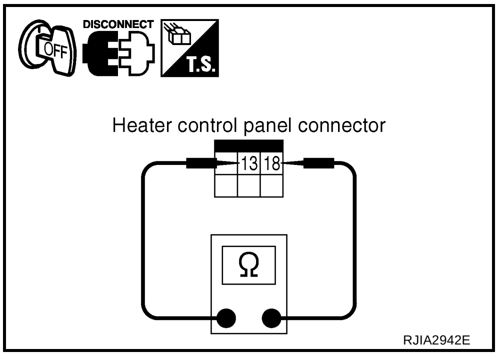

Terminals				Condition	Continuity
Heater control panel connector	Terminal No.	Heater control panel connector	Terminal No.		
M54	18	M54	13	Fan control dial: ON (Blower motor operates.)	Yes
				Fan control dial: OFF	No

OK or NG

OK >> GO TO 14.
NG >> Replace fan switch.

14. CHECK GROUND CIRCUIT

Check continuity between heater control panel harness connector M54 terminal 13 and ground.

13 – Ground : Continuity should exist.

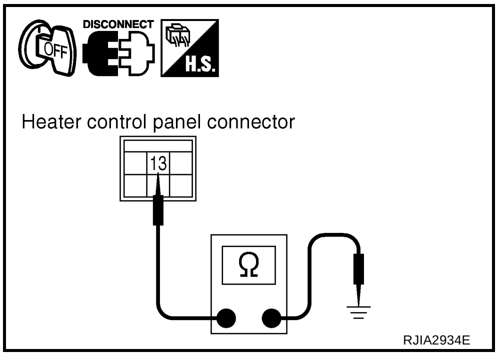

OK or NG

OK >> INSPECTION END
NG >> Repair harness or connector.

15. CHECK CIRCUIT CONTINUITY BETWEEN ECM AND HEATER CONTROL PANEL

1. Turn ignition switch OFF.
2. Disconnect ECM and heater control panel connector.
3. Check continuity between heater control panel harness connector M55 terminal 7 and ECM harness connector M118 terminal 110.

7 – 110 : Continuity should exist.

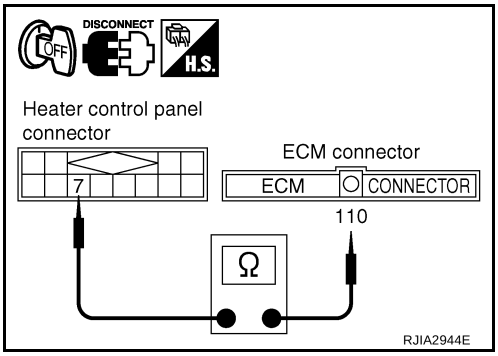

OK or NG

OK >> Replace ECM.
NG >> Repair harness or connector.

16. CHECK CIRCUIT CONTINUITY BETWEEN COMBINATION METER AND HEATER CONTROL PANEL

1. Turn ignition switch OFF.
2. Disconnect combination meter connector and heater control panel connector.
3. Check continuity between heater control panel harness connector M55 terminal 12 and combination meter harness connector M44 terminal 32.

12 – 32 : Continuity should exist.

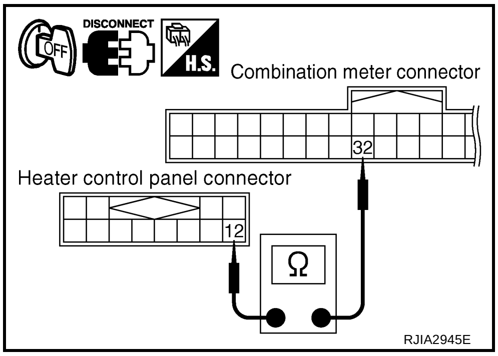

OK or NG

OK >> Replace combination meter.
NG >> Repair harness or connector.

ELECTRICAL COMPONENT INSPECTION

A/C Relay

Check circuit continuity between terminal Nos. 3 and 5.

Conditions	Continuity
12V direct current supply between terminal Nos. 1 and 2.	Yes
No current supply.	No

If NG, replace A/C relay.

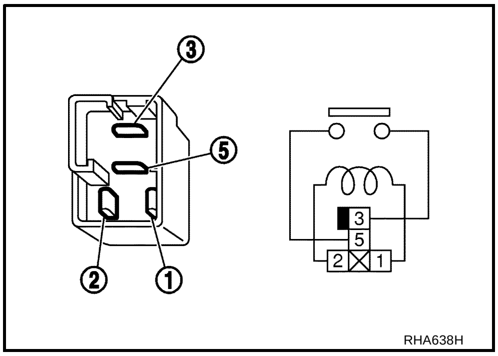

Refrigerant Pressure Sensor

The refrigerant pressure sensor is attached to the liquid tank.
Make sure that the A/C refrigerant pressure and the sensor output voltage are within the specified range as shown in the A/C operating condition figure. Refer to EC-634, "REFRIGERANT PRESSURE SENSOR" .

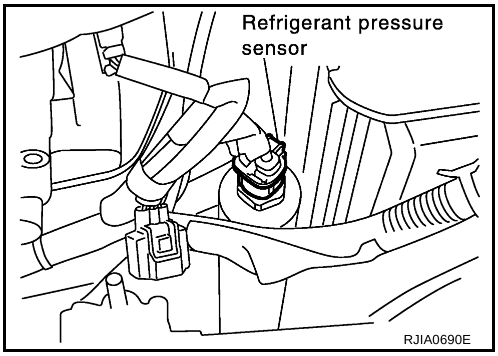

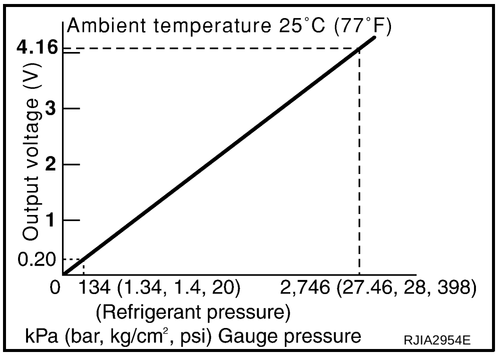

Insufficient Cooling

AJS001MY

SYMPTOM: Insufficient cooling

INSPECTION FLOW

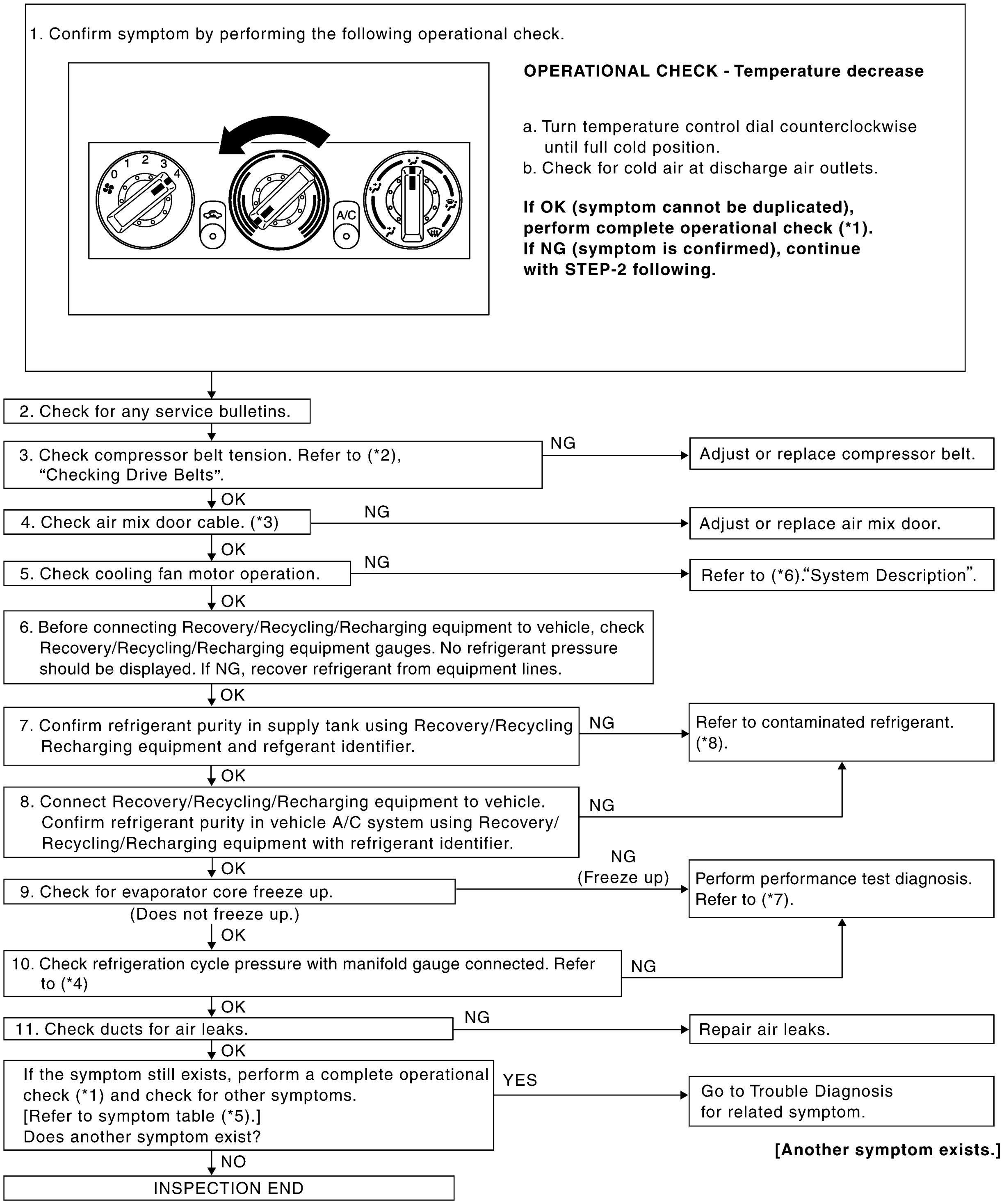

SJIA1065E

*1 MTC-36, "Operational Check" *2 EM-11, "Checking Drive Belt" *3 MTC-38, "Air Mix Door"

*4 MTC-56, "TROUBLE DIAGNOSIS FOR UNUSUAL PRESSURE" *5 MTC-28, "SYMPTOM TABLE" *6 EC-480, "SYSTEM DESCRIPTION"
*7 MTC-53, "PERFORMANCE TEST DIAGNOSIS" *8 MTC-5, "CONTAMINATED REFRIGERANT"

PERFORMANCE TEST DIAGNOSIS

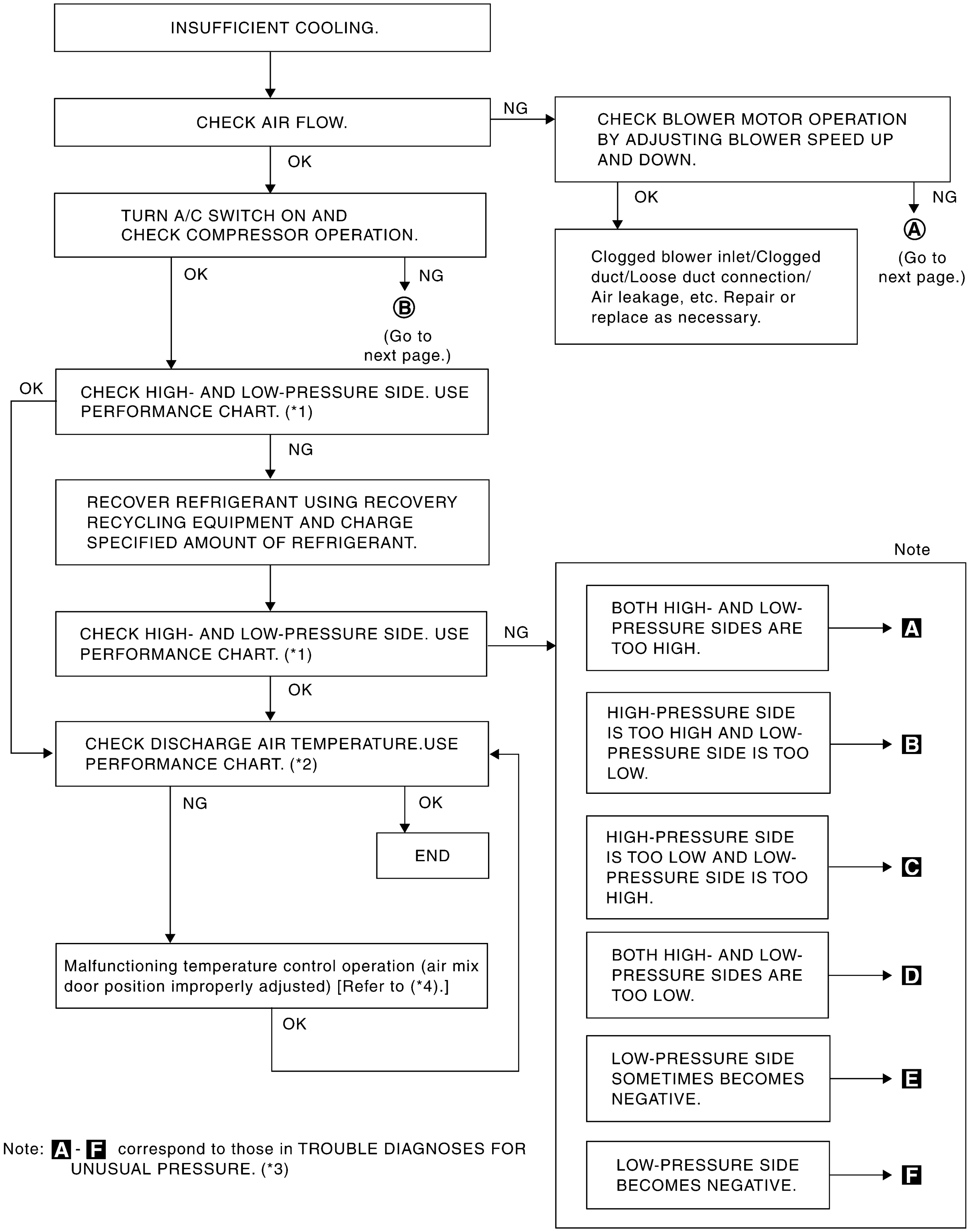

RJIA1601E

*1 MTC-55, "PERFORMANCE CHART" *2 MTC-55, "PERFORMANCE CHART" *3 MTC-56, "TROUBLE DIAGNOSIS FOR UNUSUAL PRESSURE"

*4 MTC-38, "Air Mix Door"

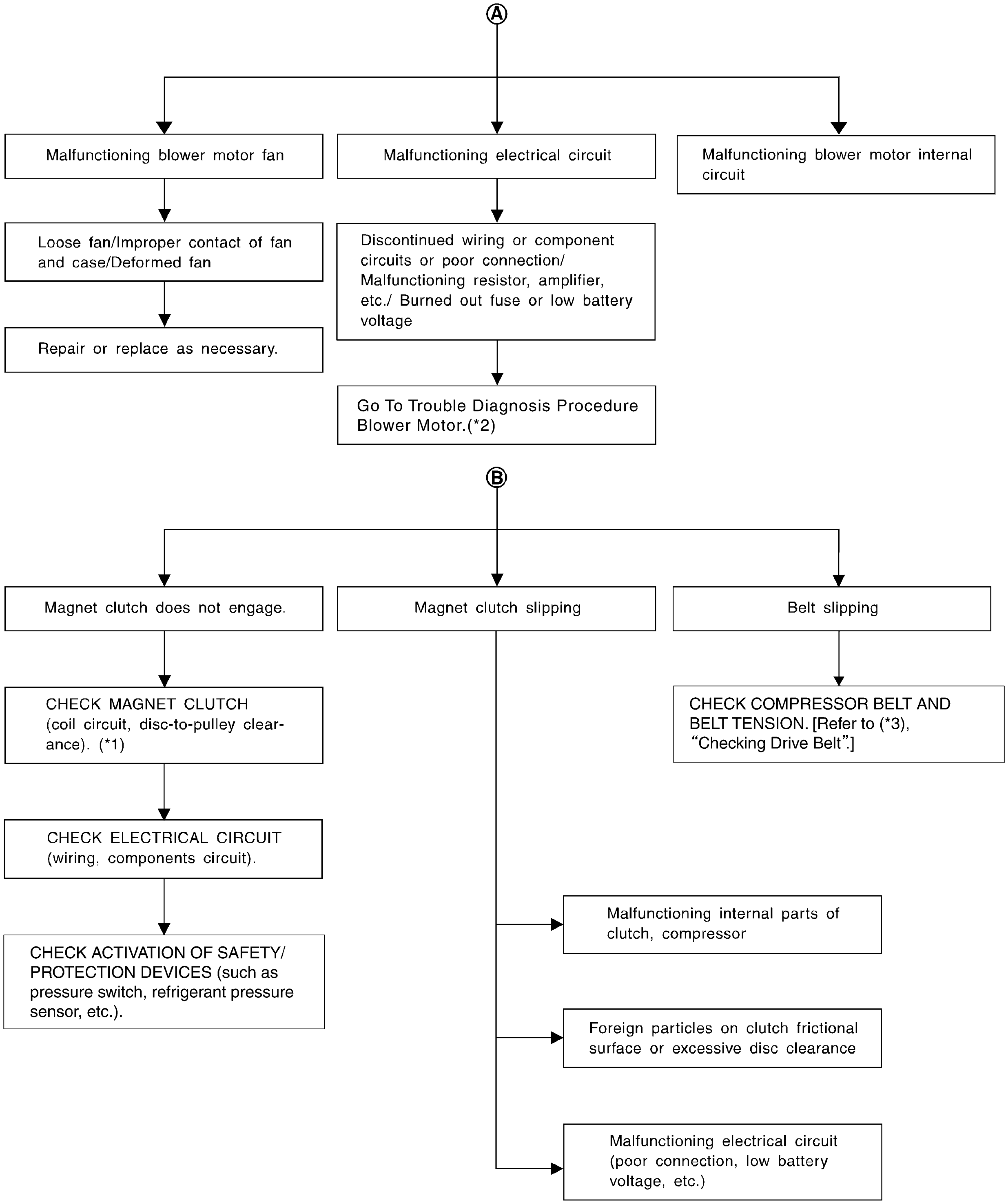

RJIA3107E

*1 MTC-82, "Removal and Installation of Compressor Clutch" *2 MTC-42, "Blower Motor Circuit" *3 EM-11, "Checking Drive Belt"

PERFORMANCE CHART

Test Condition

Testing must be performed as follows:

Vehicle location	Indoors or in the shade (in a well-ventilated place)
Doors	Closed
Door windows	Open
Hood	Open
TEMP.	Max. COLD
Mode control dial	(Ventilation) set
Recirculation (REC) switch	(Recirculation) set
Fan (blower) speed	Max. speed set
Engine speed	Idle speed
Operate the air conditioning system for 10 minutes before taking measurements.	

Test Reading

Recirculating-to-discharge Air Temperature Table

Inside air (Recirculating air) at blower assembly inlet		Discharge air temperature at center ventilator °C (°F)
Relative humidity %	Air temperature °C (°F)	
50 - 60	25 (77)	10.0 - 11.6 (50 - 53)
	30 (86)	13.9 - 16.2 (57 - 61)
	35 (95)	17.8 - 21.4 (64 - 71)
60 - 70	25 (77)	11.6 - 13.9 (53 - 57)
	30 (86)	16.2 - 18.9 (61- 66)
	35 (95)	21.4 - 24.5 (71 - 76)

Ambient Air Temperature-to-operating Pressure Table

Ambient air		High-pressure (Discharge side) kPa (kg/cm^2 , psi)	Low-pressure (Suction side) kPa (kg/cm^2 , psi)
Relative humidity %	Air temperature °C (°F)		
50 - 70	30 (86)	980 - 1,180 (9.99 - 12.04, 142 - 171)	230 - 270 (2.35 - 2.75, 33 - 39)
	35 (95)	1,180 - 1,390 (12.04 - 14.18, 171 - 202)	260 - 310 (2.65 - 3.16, 38 - 45)
	40 (104)	1,400 - 1,580 (14.28 - 16.12, 203 - 229)	300 - 350 (3.06 - 3.57, 44 - 51)

TROUBLE DIAGNOSIS FOR UNUSUAL PRESSURE

Whenever system's high and/or low side pressure(s) is/are unusual, diagnose using a manifold gauge. The marker above the gauge scale in the following tables indicates the standard (usual) pressure range. Since the standard (usual) pressure, however, differs from vehicle to vehicle, refer to above table (Ambient air temperature-to-operating pressure table).

Both High and Low-pressure Sides are Too High

Gauge indication	Refrigerant cycle	Probable cause	Corrective action
Both high- and low-pressure sides are too high. 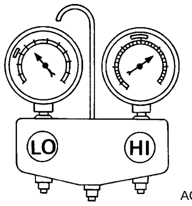 AC359A	Pressure is reduced soon after water is splashed on condenser.	Excessive refrigerant charge in refrigeration cycle	Reduce refrigerant until specified pressure is obtained.
	Air suction by cooling fan is insufficient.	Insufficient condenser cooling performance ↓ 1. Condenser fins are clogged. 2. Improper fan rotation of cooling fan	● Clean condenser. ● Check and repair cooling fan as necessary.
	● Low-pressure pipe is not cold. ● When compressor is stopped high-pressure value quickly drops by approximately 196 kPa (2 kg/cm^2 , 28 psi). It then decreases gradually thereafter.	Poor heat exchange in condenser (After compressor operation stops, high-pressure decreases too slowly.) ↓ Air in refrigeration cycle	Evacuate repeatedly and recharge system.
	Engine tends to overheat.	Engine cooling systems malfunction.	Check and repair each engine cooling system.
	● An area of the low-pressure pipe is colder than areas near the evaporator outlet. ● Plates are sometimes covered with frost.	● Excessive liquid refrigerant on low-pressure side ● Excessive refrigerant discharge flow ● Expansion valve is open a little compared with the specification. ↓ Improper expansion valve installation	Replace expansion valve.

High-pressure Side is Too High and Low-pressure Side is Too Low

Gauge indication	Refrigerant cycle	Probable cause	Corrective action
High-pressure side is too high and low-pressure side is too low. 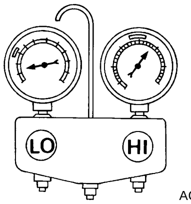 AC360A	Upper side of condenser and high-pressure side are hot, however, liquid tank is not so hot.	High-pressure tube or parts located between compressor and condenser are clogged or crushed.	● Check and repair or replace malfunctioning parts. ● Check lubricant for contamination.

High-pressure Side is Too Low and Low-pressure Side is Too High

Gauge indication	Refrigerant cycle	Probable cause	Corrective action
High-pressure side is too low and low-pressure side is too high. 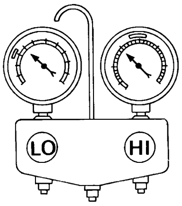 AC356A	High- and low-pressure sides become equal soon after compressor operation stops.	Compressor pressure operation is improper. ↓ Damaged inside compressor packings	Replace compressor.
	No temperature difference between high- and low-pressure sides	Compressor pressure operation is improper. ↓ Damaged inside compressor packings.	Replace compressor.

Both High and Low-pressure Sides are Too Low

Gauge indication	Refrigerant cycle	Probable cause	Corrective action
Both high- and low-pressure sides are too low. 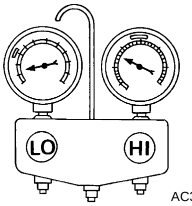 AC353A	● There is a big temperature difference between liquid tank outlet and inlet. Outlet temperature is extremely low. ● Liquid tank inlet and expansion valve are frosted.	Liquid tank inside is slightly clogged.	● Replace liquid tank. ● Check lubricant for contamination.
	● Temperature of expansion valve inlet is extremely low as compared with areas near liquid tank. ● Expansion valve inlet may be frosted. ● Temperature difference occurs somewhere in high-pressure side.	High-pressure pipe located between liquid tank and expansion valve is clogged.	● Check and repair malfunctioning parts. ● Check lubricant for contamination.
	Expansion valve and liquid tank are warm or slightly cool when touched.	Low refrigerant charge ↓ Leaking fittings or components	Check refrigerant for leaks. Refer to MTC-90, "Checking for Refrigerant Leaks" .
	There is a big temperature difference between expansion valve inlet and outlet while the valve itself is frosted.	Expansion valve closes a little compared with the specification. ↓ 1. Improper expansion valve adjustment 2. Malfunctioning expansion valve 3. Outlet and inlet may be clogged.	● Remove foreign particles by using compressed air. ● Replace expansion valve. ● Check lubricant for contamination.
	An area of the low-pressure pipe is colder than areas near the evaporator outlet.	Low-pressure pipe is clogged or crushed.	● Check and repair malfunctioning parts. ● Check lubricant for contamination.
	Air flow volume is not enough or is too low.	Evaporator is frozen.	● Replace compressor. ● Repair evaporator fins. ● Replace evaporator. ● Refer to MTC-42, "Blower Motor Circuit" .

Low-pressure Side Sometimes Becomes Negative

Gauge indication	Refrigerant cycle	Probable cause	Corrective action
Low-pressure side sometimes becomes negative. 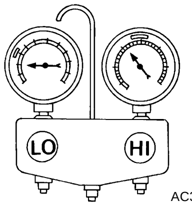	● Air conditioning system does not function and does not cyclically cool the compartment air. ● The system constantly functions for a certain period of time after compressor is stopped and restarted.	Refrigerant does not discharge cyclically. ↓ Moisture is frozen at expansion valve outlet and inlet. ↓ Water is mixed with refrigerant.	● Drain water from refrigerant or replace refrigerant. ● Replace liquid tank.

Low-pressure Side Becomes Negative

Gauge indication	Refrigerant cycle	Probable cause	Corrective action
Low-pressure side becomes negative. 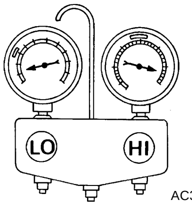	Liquid tank or front/rear side of expansion valve's pipe is frosted or dewed.	High-pressure side is closed and refrigerant does not flow. ↓ Expansion valve or liquid tank is frosted.	Leave the system at rest until no frost is present. Start it again to check whether or not the malfunction is caused by water or foreign particles. ● If water is the cause, initially cooling is okay. Then the water freezes causing a blockage. Drain water from refrigerant or replace refrigerant. ● If due to foreign particles, remove expansion valve and remove the particles with dry and compressed air (not shop air). ● If either of the above methods cannot correct the malfunction, replace expansion valve. ● Replace liquid tank. ● Check lubricant for contamination.

Insufficient Heating

AJS001MZ

SYMPTOM: Insufficient heating

INSPECTION FLOW

1. Confirm symptom by performing the following operational check.

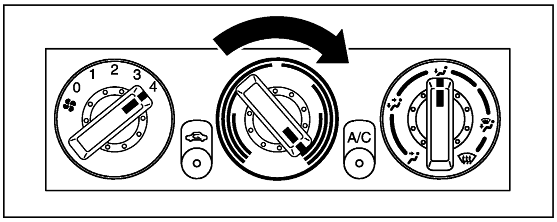

OPERATIONAL CHECK - Temperature increase

a. Turn temperature control dial clockwise until full hot position.
b. Check for hot air at discharge air outlets.

If OK (symptom cannot be duplicated), perform complete operational check (*1).
If NG (symptom is confirmed), continue with STEP-2 following.

2. Check for any service bulletins. → 3.

3. Check the following:
   - Engine coolant level [Refer to (*2), "Changing Engine Coolant".]
   - Hoses for leaks or kinks.
   - Radiator cap. Refer to (*3), "Checking Radiator Cap"
   - Air in cooling system.

   NG → Repair/replace as necessary.
   OK → 4.

4. Check air mix door cable (*6).
   NG → Adjust or replace air mix door.
   OK → 5.

5. Check ducts for air leaks.
   NG → **Repair leaks.**
   OK → 6.

6. **Check the heater inlet and outlet hose temperatures by touching.**
   - Hot inlet / Warm outlet → Check water temperature sensor or thermostat (*4)
     - NG → Repair or replace as necessary. Retest.
     - OK → System OK
   - Both hoses warm → Check heater hoses for proper installation.
     - NG → Repair or replace as necessary. Retest.
     - OK → Back flush heater core, drain and refill coolant. [Refer to (*2), "Changing Engine Coolant".] Retest.
       - Hot inlet / Warm outlet → System OK
       - Both hoses warm → Replace heater core. Refill engine coolant. [Refer to (*2) "Changing Engine Coolant".] Retest.
         - Hot inlet / Warm outlet → System OK

System OK → If the symptom still exists, perform a complate operational check (*1) and check for other symptoms. [Refer to symptom table (*5).] Does another symptom exist?
   - YES → Go to Trouble Diagnosis for related symptom. **[Another symptom exists.]**

SJIA1066E

*1 MTC-36, "Operational Check"
*2 CO-8, "Changing Engine Coolant"
*3 CO-12, "Checking Radiator Cap"
*4 EC-201, "DTC P0117, P0118 ECT SENSOR" and CO-22, "THERMOSTAT AND WATER CONTROL VALVE" .
*5 MTC-28, "SYMPTOM TABLE"
*6 MTC-72, "Air Mix Door Cable Adjustment"

Noise

AJS001N0

SYMPTOM: Noise

INSPECTION FLOW

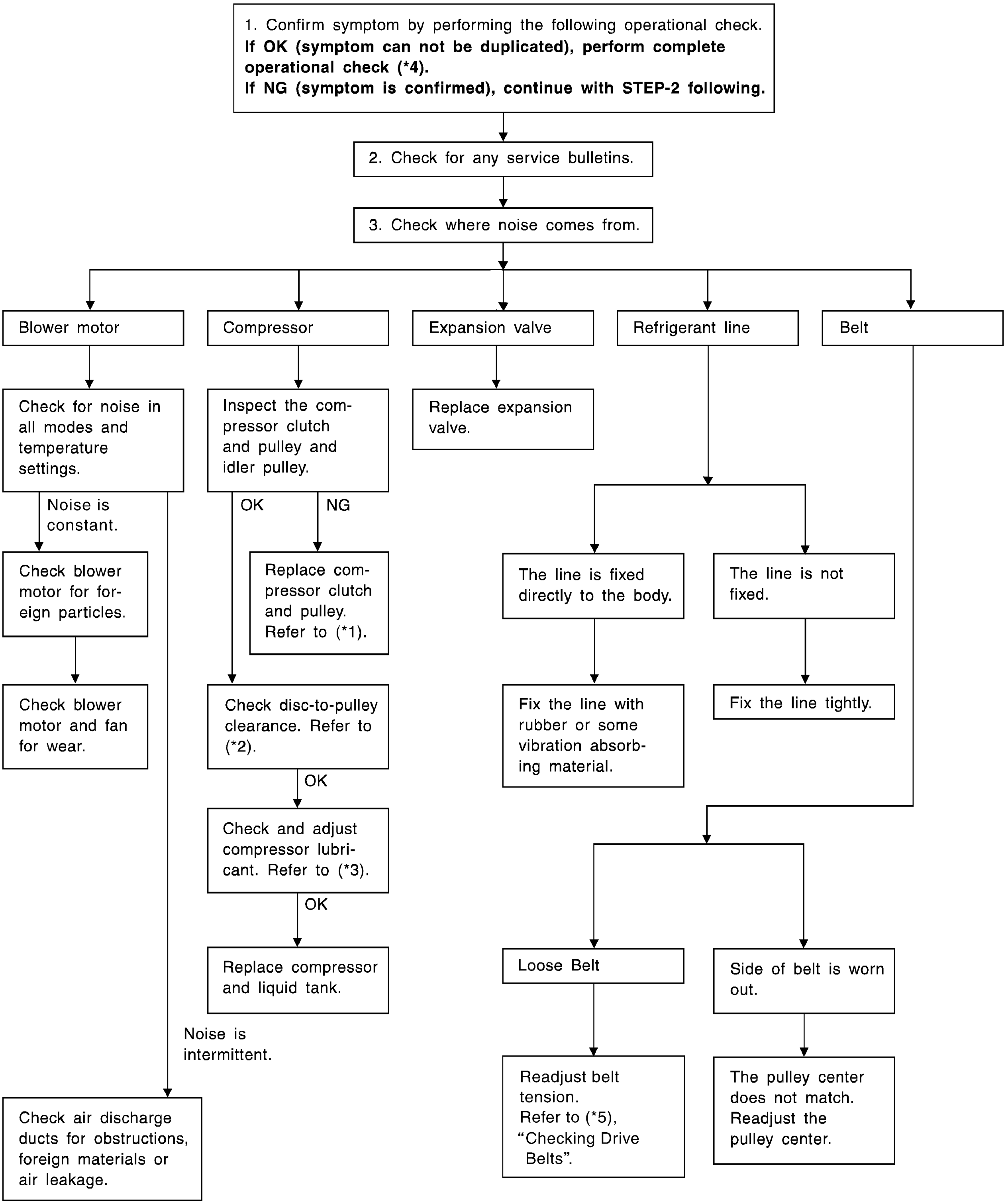

RJIA3108E

*1 Compressor clutch, MTC-82, "REMOVAL" .

*2 Compressor clutch, MTC-84, "INSTALLATION" .

*3 MTC-22, "Maintenance of Lubricant Quantity in Compressor"

*4 MTC-36, "Operational Check"

*5 EM-11, "Checking Drive Belt"

CONTROLLER

PFP:27500

Removal and Installation

AJS001N1

REMOVAL

1. Remove mode door cable and air mix door cable from heater unit.
2. Remove cluster lid C. Refer to IP-11, "Removal and Installation" .
3. Remove mounting screws from heater control panel.
4. Disconnect connector, and then remove heater control panel.

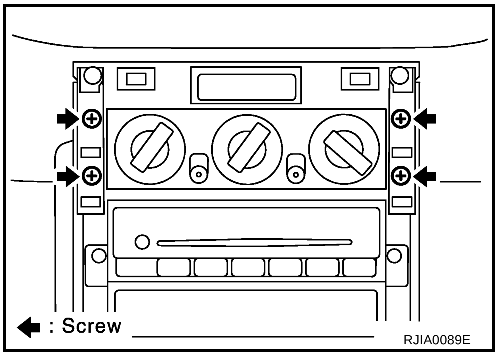

INSTALLATION

Installation is basically the reverse order of removal.

Disassembly and Assembly

AJS001N2

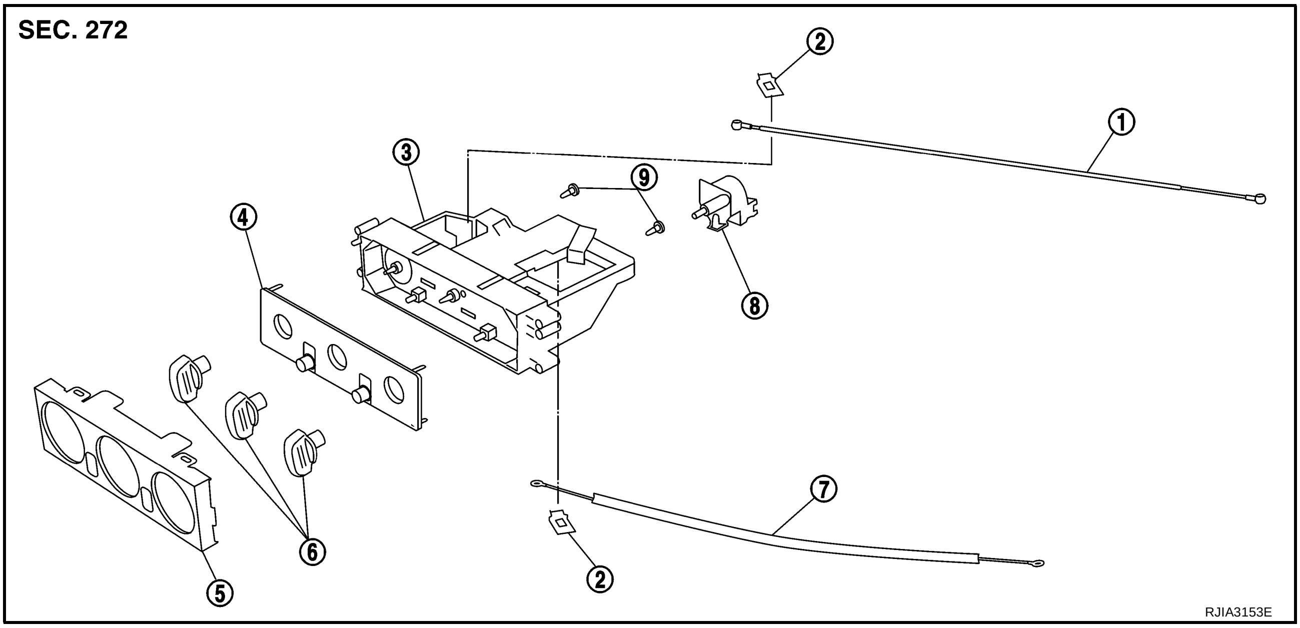

1. Mode door cable	2. Clamp	3. Case assembly
4. Heater panel	5. Finisher	6. Dial
7. Air mix door cable	8. Fan switch	9. Bulb

BLOWER UNIT

PFP:27200

Removal and Installation

AJS001N3

REMOVAL

1. Remove glove box, glove box cover and instrument passenger lower panel. Refer to IP-11, "Removal and Installation" .
2. Remove NAVI control unit. Refer to AV-63, "Removal and Installation of NAVI Control Unit" .
3. Remove ECM mounting bolt, and then remove ECM with ECM bracket attached.
4. Remove instrument panel mounting screw.
5. Remove blower unit mounting bolt and screws.
6. Disconnect blower motor connector and fan control amp. connector.

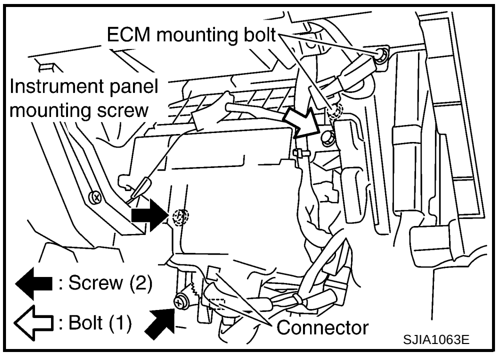

SJIA1063E

7. Disconnect intake door motor connector, and then remove harness clips.
8. Remove blower unit.

   CAUTION:

   Slide the blower unit toward the right, remove location pins (2 parts), and then move it downward.

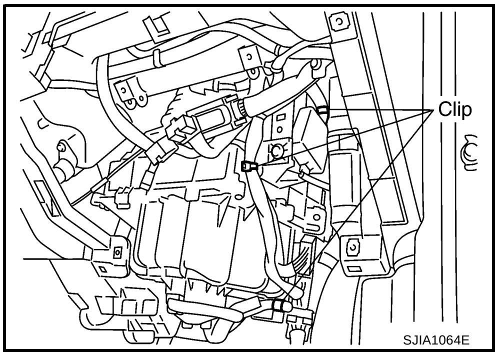

SJIA1064E

INSTALLATION

Installation is basically the reverse order of removal.

CAUTION:

Make sure location pins (2 parts) are securely installed.

Disassembly and Assembly

AJS001N4

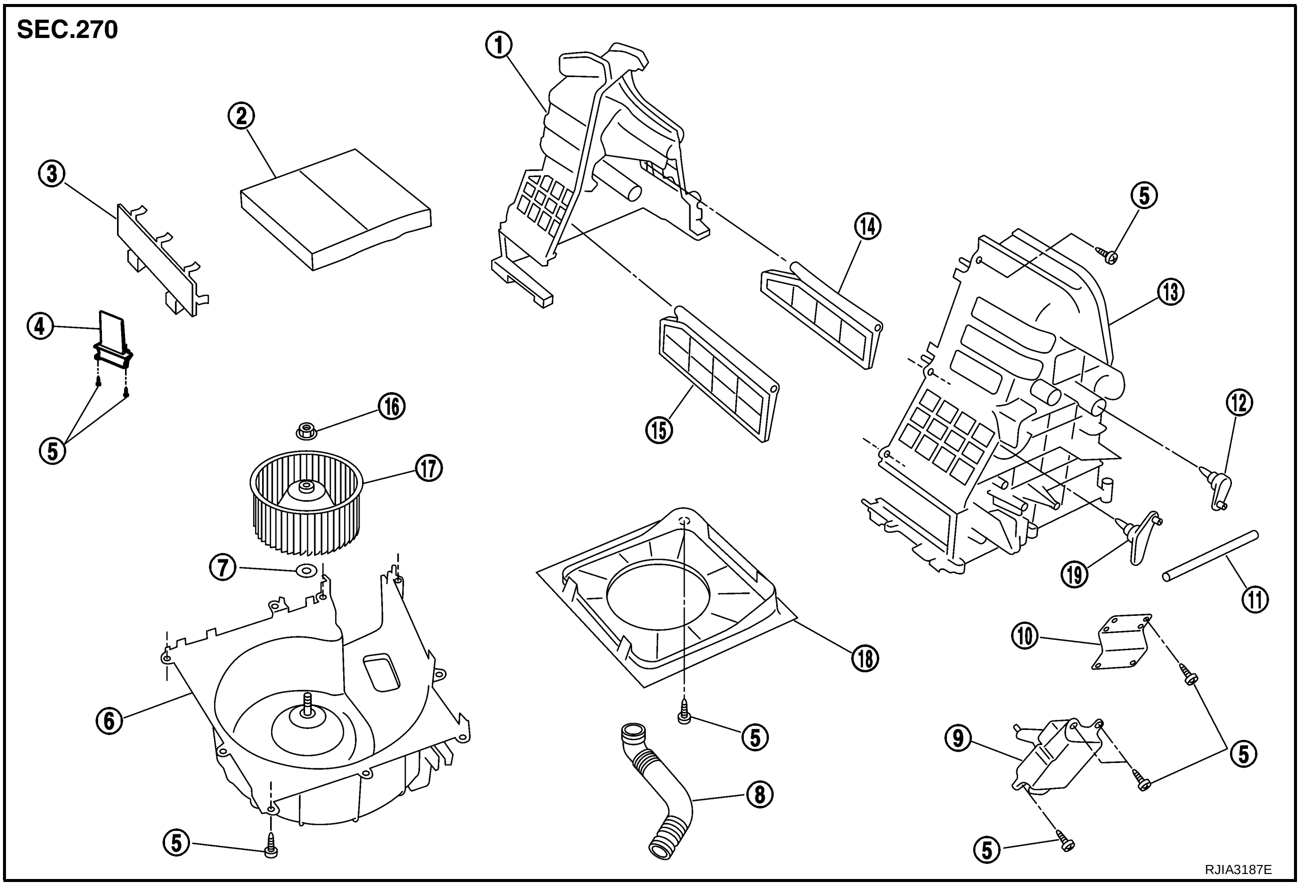

1. Upper case 2	2. In-cabin microfilter	3. Filter cover
4. Fan resistor	5. Screw	6. Blower fan motor assembly
7. Washer	8. Cooling hose	9. Intake door motor
10. Motor bracket	11. Intake door link	12. Intake door lever 2
13. Upper case 1	14. Intake door 2	15. Intake door 1
16. Nut	17. Blower fan	18. Bell mouth
19. Intake door lever 1		

CAUTION:

If retaining tabs are damaged while disassembling blower unit, use 9 screws (27111-2Y000) to assemble blower unit.

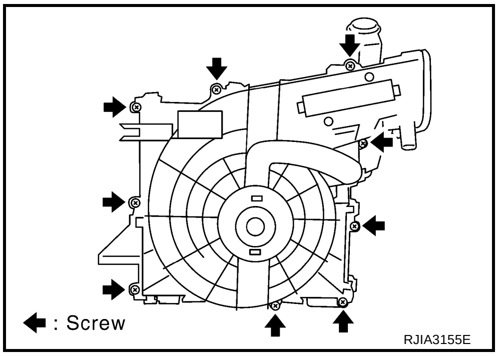

BLOWER MOTOR

PFP:27226

Removal and Installation

AJS001N5

REMOVAL

1. Remove blower unit. Refer to MTC-62, "BLOWER UNIT" .
2. Separate blower motor from blower unit.

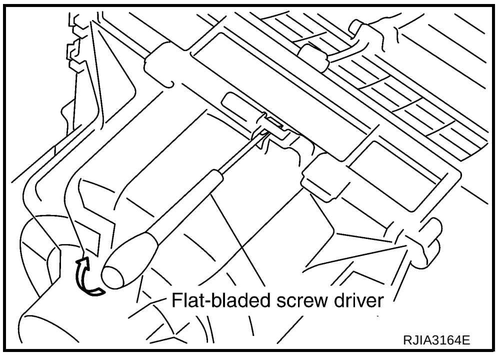

3. Remove cooling hose, blower fan resistor and blower fan.

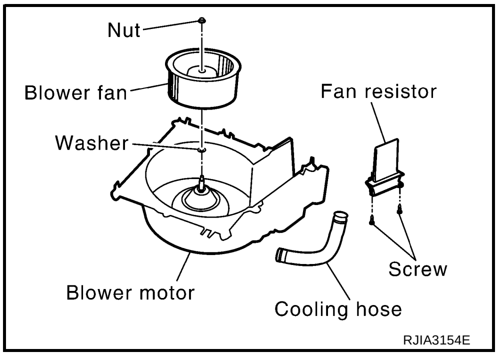

INSTALLATION

Installation is basically the reverse order of removal.

CAUTION:

If retaining tabs are damaged while disassembling blower unit, use 9 screws (27111-2Y000) to assemble blower unit.

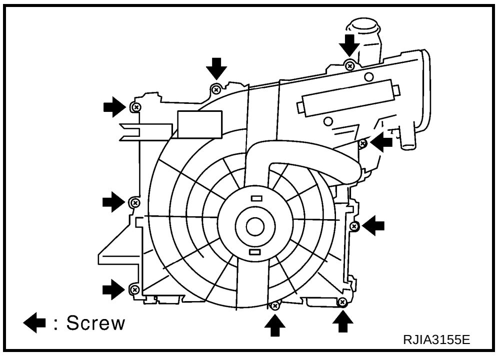

INTAKE DOOR MOTOR

PFP:27730

Removal and Installation

AJS001N7

REMOVAL

1. Remove blower unit. Refer to MTC-62, "BLOWER UNIT" .
2. Remove mounting screws, and then remove intake door motor from blower unit.

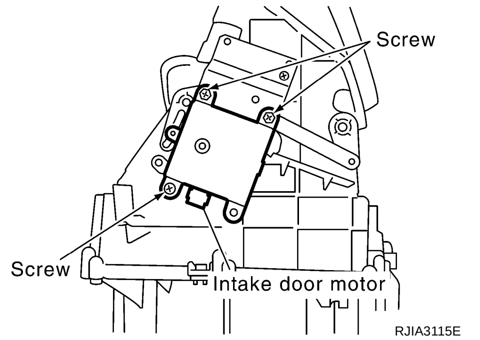

RJIA3115E

INSTALLATION

Installation is basically the reverse order of removal.

BLOWER FAN RESISTOR

PFP:27150

Removal and Installation

AJS001N6

REMOVAL

1. Remove glove box, glove box cover and instrument passenger lower panel. Refer to IP-11, "Removal and Installation" .
2. Remove mounting screws, and then remove fan resistor.

   CAUTION:
   Do not repair the thermal fuse of the fan resistor.

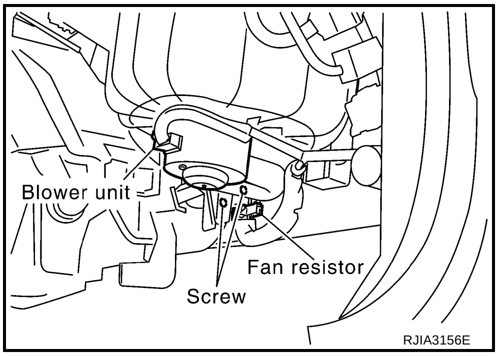

INSTALLATION

Installation is basically the reverse order of removal.

IN-CABIN MICROFILTER

PFP:27277

Removal and Installation

AJS001N8

FUNCTION

Air inside passenger compartment is kept clean at either recirculation or fresh mode by installing in-cabin microfilter into blower unit.

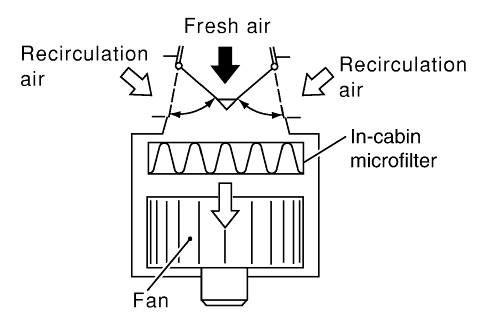

RJIA3117E

REPLACEMENT TIMING

Replace in-cabin microfilter.
Refer to MA-8, "CHASSIS AND BODY MAINTENANCE" in Schedule 1 and MA-9, "CHASSIS AND BODY MAINTENANCE" Schedule 2.
Caution label is fixed inside glove box.

REPLACEMENT PROCEDURES

1. Remove glove box and glove box cover. Refer to IP-11, "Removal and Installation" .
2. Remove filter cover.
3. Take out in-cabin microfilter from blower unit.
4. Replace with new one and reinstall on blower unit.
5. Reinstall glove box and glove box cover.

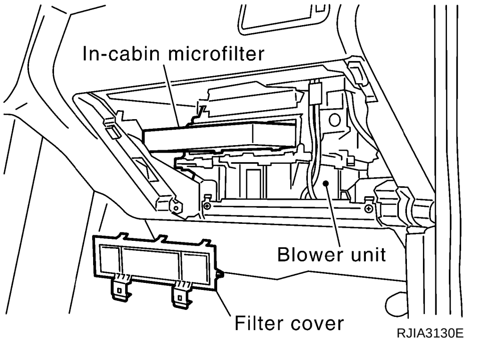

RJIA3130E

A B C D E F G H I MTC K L M

HEATER & COOLING UNIT ASSEMBLY

PFP:27110

Removal and Installation

AJS001N9

REMOVAL

1. Use a refrigerant collecting equipment (for HFC-134a) to discharge the refrigerant.
2. Drain coolant from cooling system. Refer to CO-8, "Changing Engine Coolant" .
3. Disconnect two heater hoses from heater core pipe.
4. Remove mounting bolt from low-pressure flexible hose.

   CAUTION:

   Cap or wrap the joint of the pipe with suitable material such as vinyl tape to avoid the entry of air.
5. Remove blower unit. Refer to MTC-62, "BLOWER UNIT" .

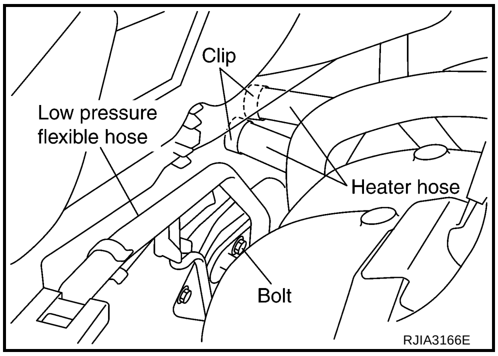

6. Remove instrument panel. Refer to IP-11, "Removal and Installation" .
7. Remove clips of vehicle harness from steering member.
8. Remove mounting nuts, and then remove instrument stay.

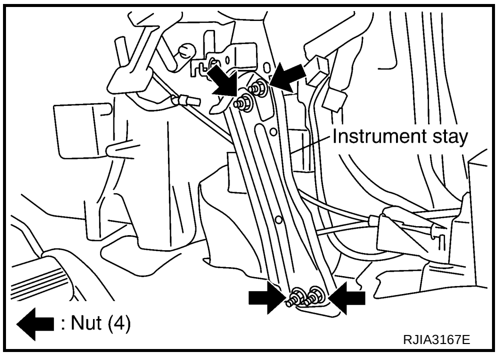

9. Remove mounting bolts from heater & cooling unit.

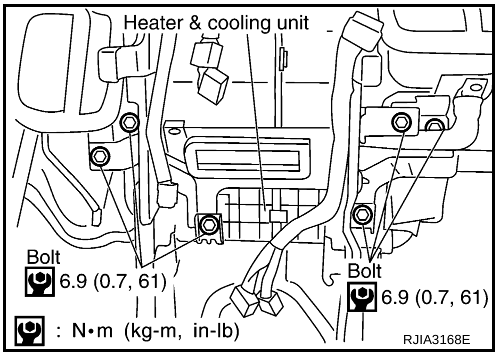

10. Remove steering member.

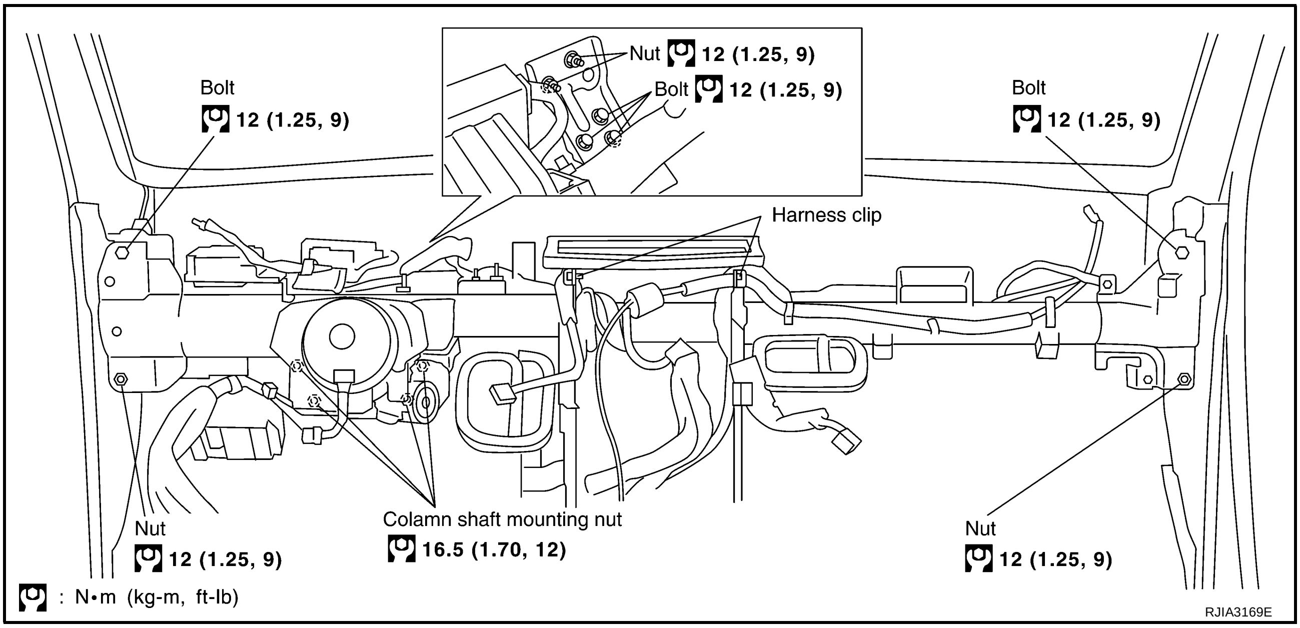

11. Remove heater & cooling unit assembly.

INSTALLATION

Installation is basically the reverse order of removal.

CAUTION:

- **Replace O-rings of low-pressure flexible hose and high-pressure pipe with new ones, and then apply compressor oil to it when installing it.**
- **When recharging refrigerant, check for leaks.**

NOTE:

- When filling radiator with coolant, refer to CO-8, "Changing Engine Coolant" .
- Recharge the refrigerant.

Disassembly and Assembly

AJS001NA

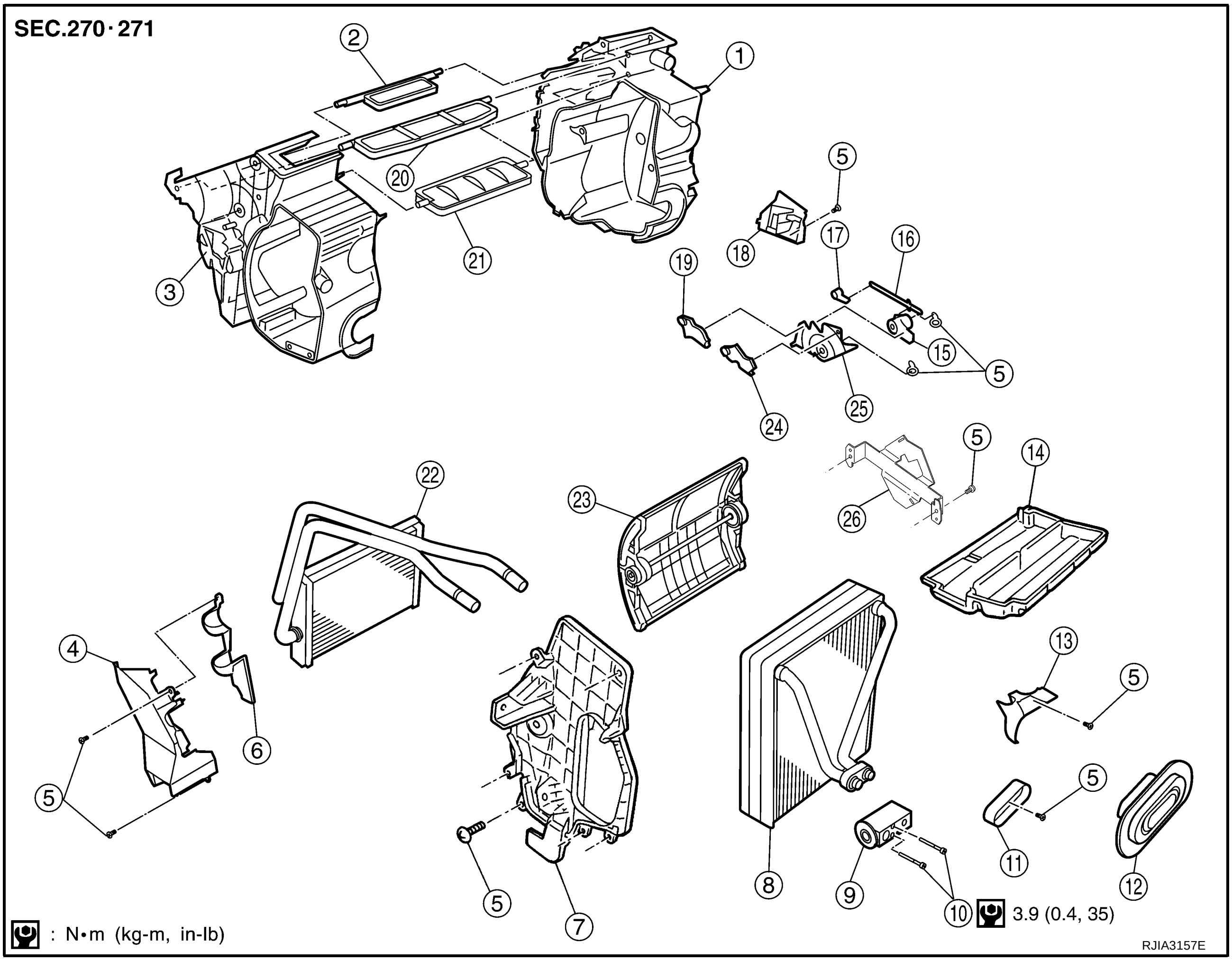

1. Heater & cooling unit case (left)
2. Defroster door
3. Heater & cooling unit case (right)
4. Foot duct (right)
5. Screw
6. Heater core cover
7. Evaporator cover
8. Evaporator
9. Expansion valve
10. Bolt
11. Expansion valve cover
12. Cooler grommet
13. Heater pipe support
14. Insulator
15. Ventilator door link 2
16. Ventilator door link 1
17. Ventilator door lever
18. Foot duct (left)
19. Defroster door lever
20. Ventilator door
21. Max. cool door
22. Heater core
23. Slide door unit (Air mix door)
24. Max. cool door lever
25. Main link
26. Harness bracket

MODE DOOR

PFP:27181

Mode Door Cable Adjustment

AJS001NC

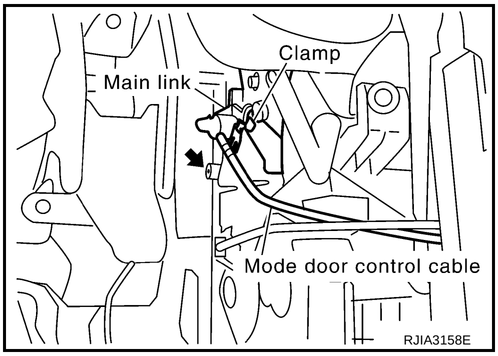

1. Set mode control dial to VENT position.
2. Move side link by hand and hold mode door in VENT position.
3. Pull on the cable cover in the direction of the arrow, and then clamp it.

   NOTE:
   After positioning control cable, make sure it operates properly.

AIR MIX DOOR

PFP:27180

Air Mix Door Cable Adjustment

AJS001ND

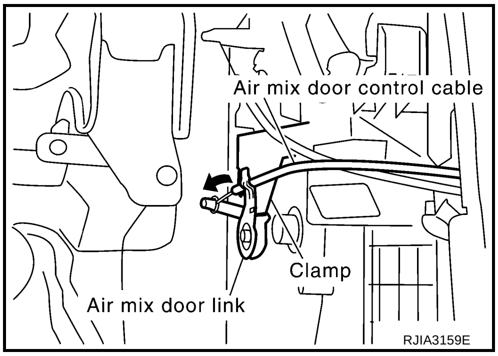

1. Set temperature control dial to full cold position.
2. Move air mix door lever by hand and hold it at the full cold position.
3. Pull on the cable cover in the direction of the arrow, and then clamp it.

   NOTE:
   After positioning control cable, make sure it operates properly.

HEATER CORE

PFP:27140

Removal and Installation

AJS001NB

REMOVAL

1. Remove heater & cooling unit assembly. Refer to MTC-68, "HEATER & COOLING UNIT ASSEMBLY" .
2. Remove heater pipe support.
3. Remove mounting screws, and then remove foot duct and heater core cover.
4. Remove heater core from heater & cooling unit assembly.

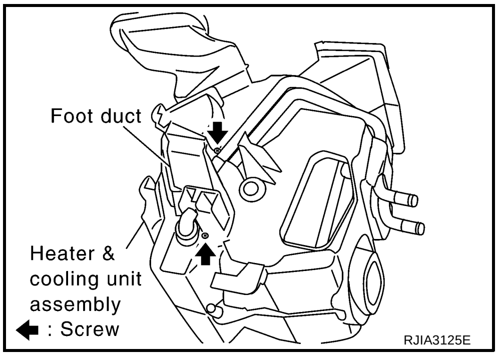

INSTALLATION

Installation is basically the reverse order of removal.

DUCTS AND GRILLES

PFP:27860

Removal and Installation

AJS001NE

REMOVAL

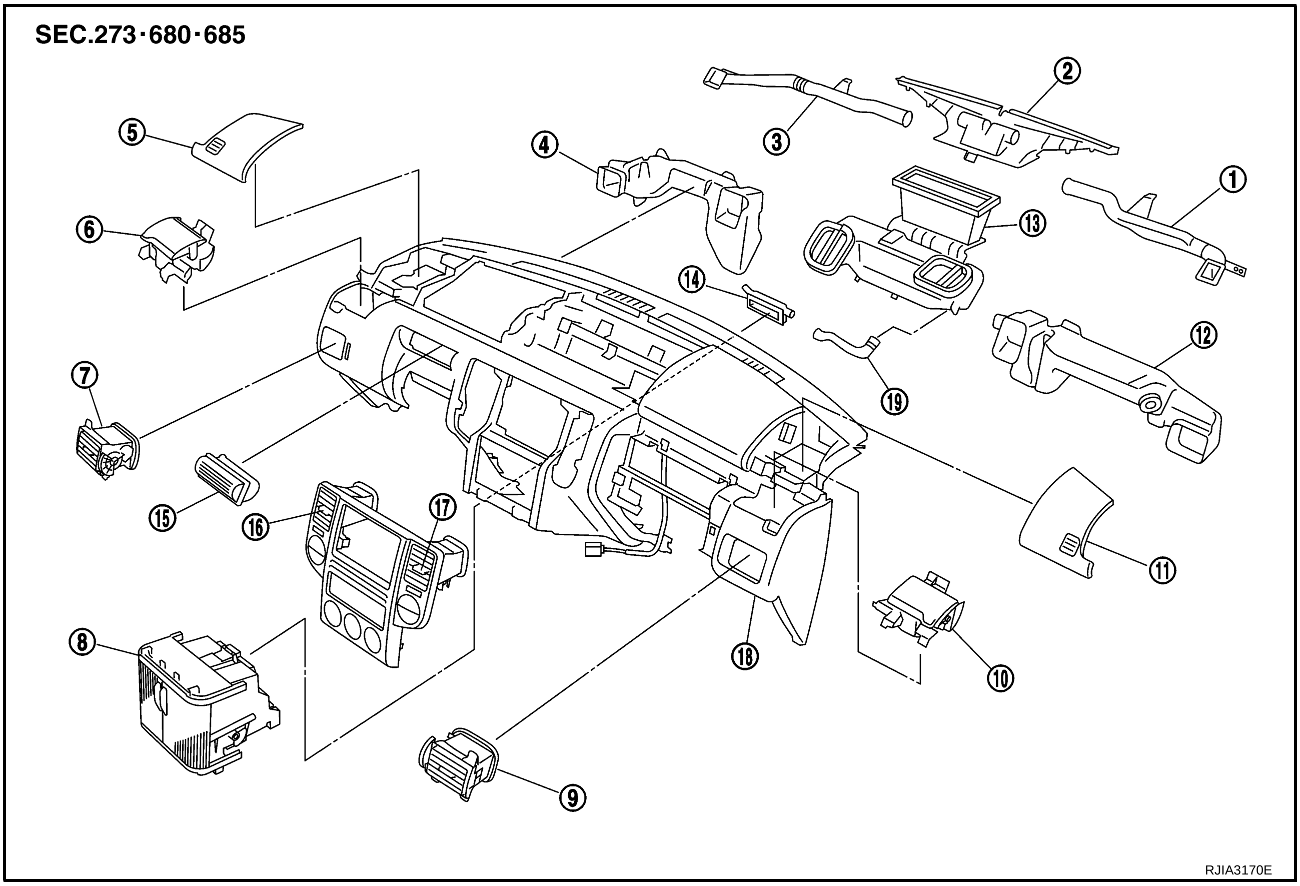

1. Side defroster duct (right)	2. Defroster nozzle	3. Side defroster duct (left)
4. Side ventilator duct (left)	5. Front speaker grille (left)	6. Cup holder (left)
7. Side ventilator grille (left)	8. Multi-box (Instrument center lower panel)	9. Side ventilator grille (right)
10. Cup holder (right)	11. Front speaker grille (right)	12. Side ventilator duct (right)
13. Adaptor	14. Multi-box duct 2	15. Driver ventilator grille
16. Center ventilator grille (left)	17. Center ventilator grille (right)	18. Instrument panel
19. Multi-box duct 1		

Removal of Center Ventilator Grilles

1. Remove cluster lid C. Refer to IP-11, "Removal and Installation" .
2. Remove mounting clips, and then remove center ventilator grilles.

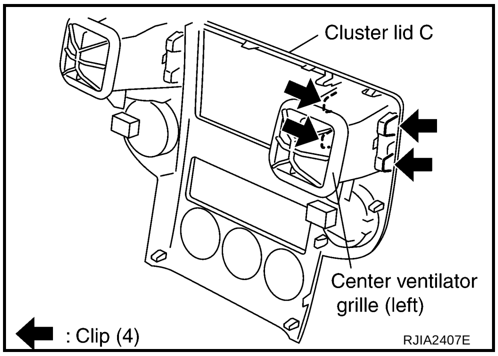

Removal of Side Ventilator Grilles

1. Remove instrument panel. Refer to IP-11, "Removal and Installation" .
2. Remove side ventilator ducts. Refer to MTC-75, "Removal of Defroster Nozzle, Ducts and Side Ventilator Ducts" .
3. Remove mounting screws, and then remove side ventilator grilles.

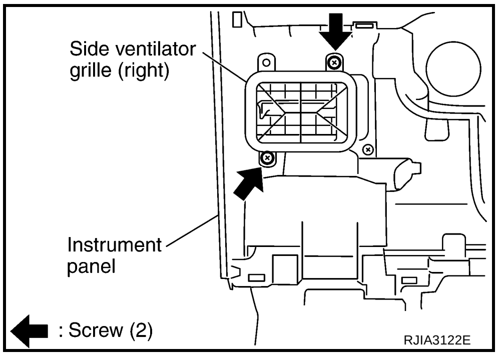

Removal of Driver Ventilator Grille

1. Remove instrument panel. Refer to IP-11, "Removal and Installation" .
2. Remove side ventilator duct (left). Refer to MTC-75, "Removal of Defroster Nozzle, Ducts and Side Ventilator Ducts" .
3. Remove mounting screws, and then remove driver ventilator grille.

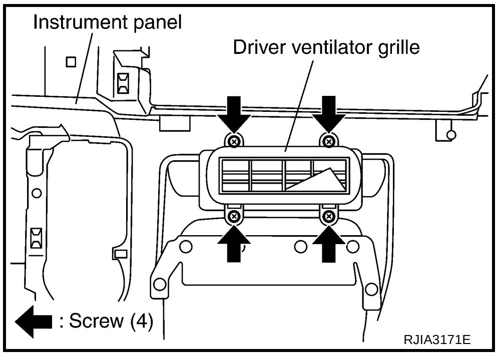

Removal of Defroster Nozzle, Ducts and Side Ventilator Ducts

1. Remove instrument panel. Refer to IP-11, "Removal and Installation" .
2. Remove mounting screws, and then remove side defroster ducts with defroster nozzle.

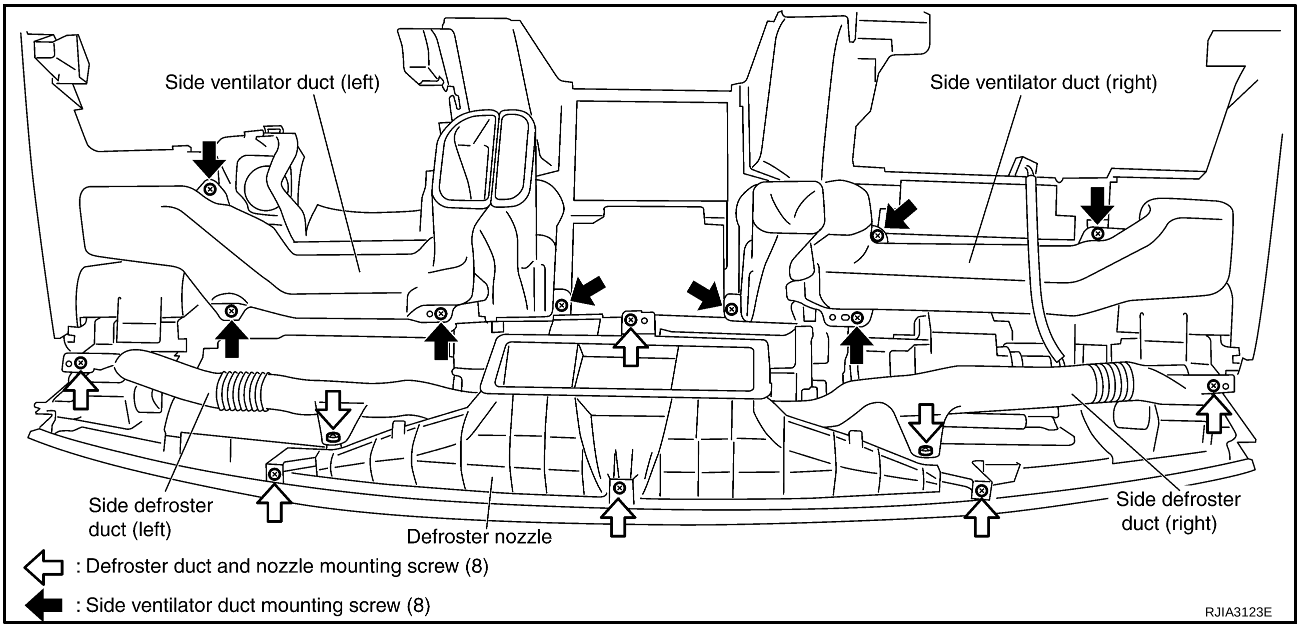

3. Remove mounting screws, and then remove side ventilator ducts.

Removal of Adaptor

1. Remove heater & cooling unit assembly. Refer to MTC-68, "HEATER & COOLING UNIT ASSEMBLY" .
2. Remove mounting screw and clip.
3. Slide adaptor toward vehicle front, and then remove adaptor.

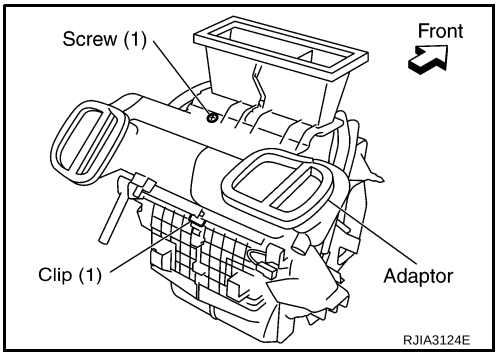

Removal of Multi-box Duct

1. Remove instrument panel. Refer to IP-11, "Removal and Installation" .
2. Remove mounting screws, and then disconnect multi-box duct from heater & cooling unit assembly.
3. Remove mounting bolts, and then remove heater & cooling unit bracket (right).
4. Remove multi-box duct from passenger side.

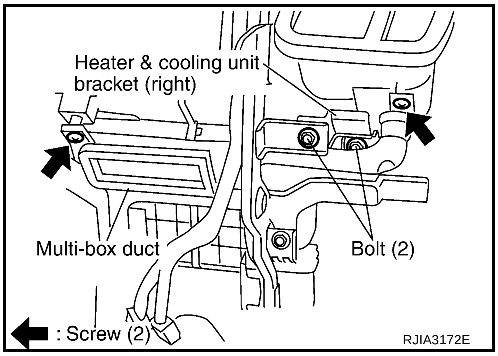

Removal of Foot Duct

1. Remove multi-box duct. Refer MTC-76, "Removal of Multi-box Duct" .
2. Remove mounting screws, and then remove foot duct.

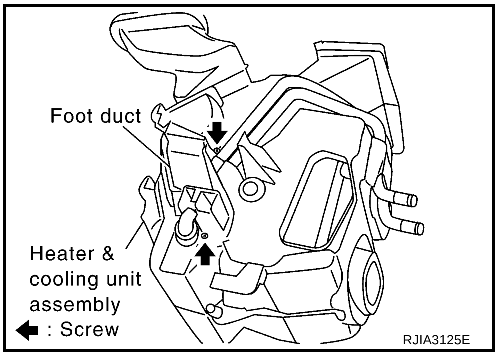

Removal of Floor Ducts

1. Remove front seats. Refer to SE-17, "FRONT SEAT" .
2. Remove multi-box (Instrument center lower panel). Refer to IP-11, "Removal and Installation" .
3. Peel back the floor trim to a point where the floor duct is visible.
4. Remove mounting bolts and clips, and then remove rear floor ducts.

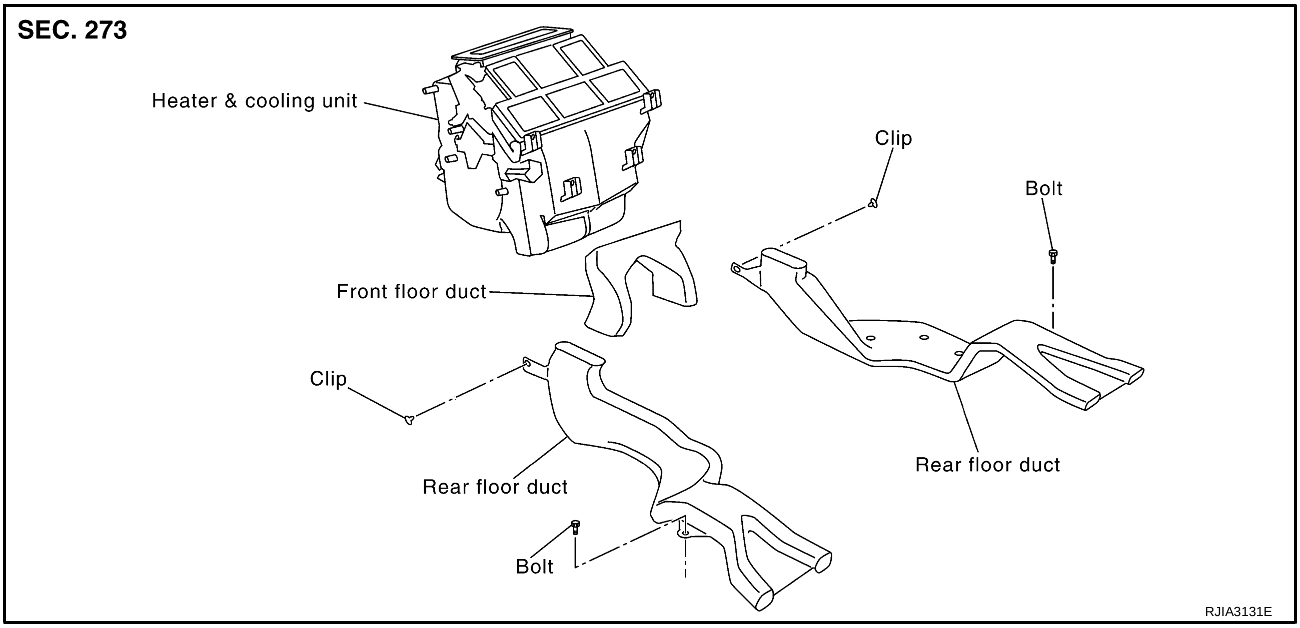

5. Remove mounting clips, and then remove front floor duct.

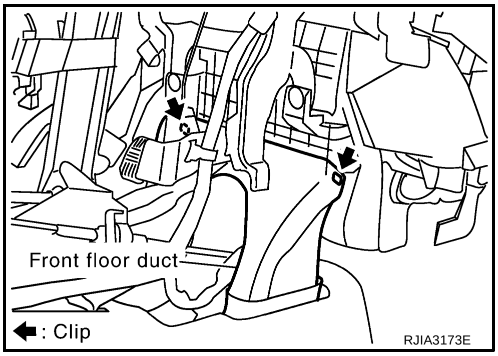

INSTALLATION

Installation is basically the reverse order of removal.

REFRIGERANT LINES

PFP:92600

HFC-134a (R-134a) Service Procedure

AJS001NF

SETTING OF SERVICE TOOLS AND EQUIPMENT

Discharging Refrigerant

WARNING:

Avoid breathing A/C refrigerant and lubricant vapor or mist. Exposure may irritate eyes, nose and throat. Remove HFC-134a (R-134a) from A/C system, using certified service equipment meeting requirements of SAE J-2210 [HFC-134a (R-134a) recycling equipment] or J-2209 [HFC-134a (R-134a) recovery equipment]. If accidental system discharge occurs, ventilate work area before resuming service. Additional health and safety information may be obtained from refrigerant and lubricant manufacturers.

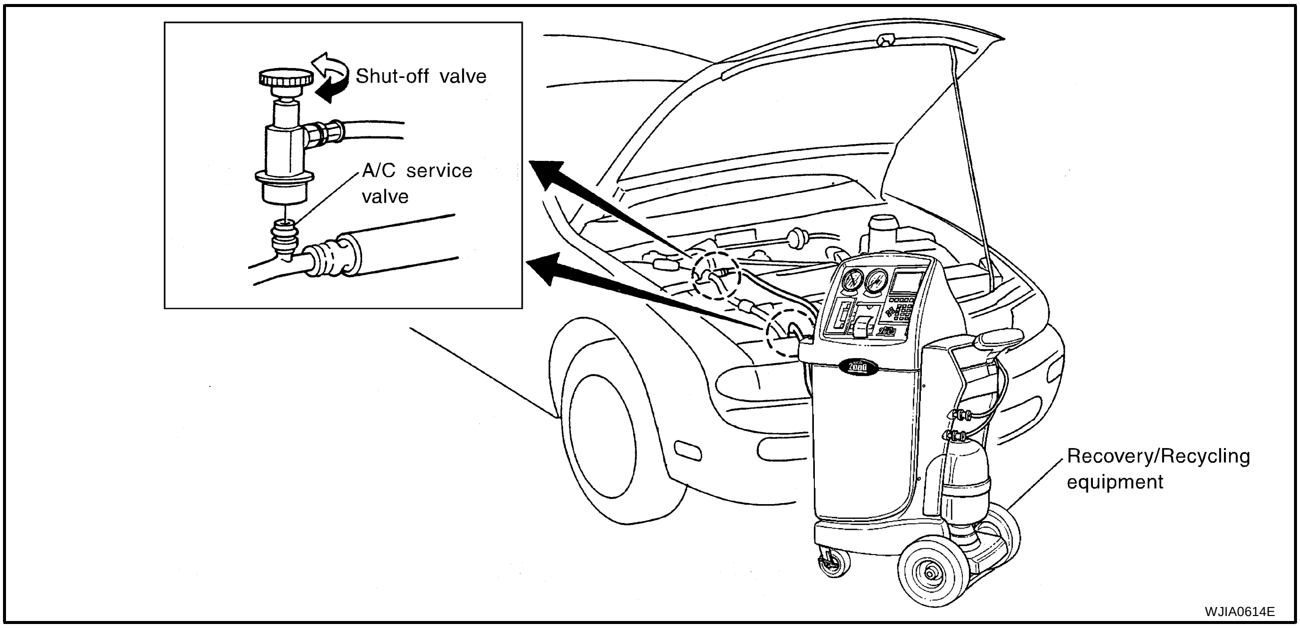

Evacuating System and Charging Refrigerant

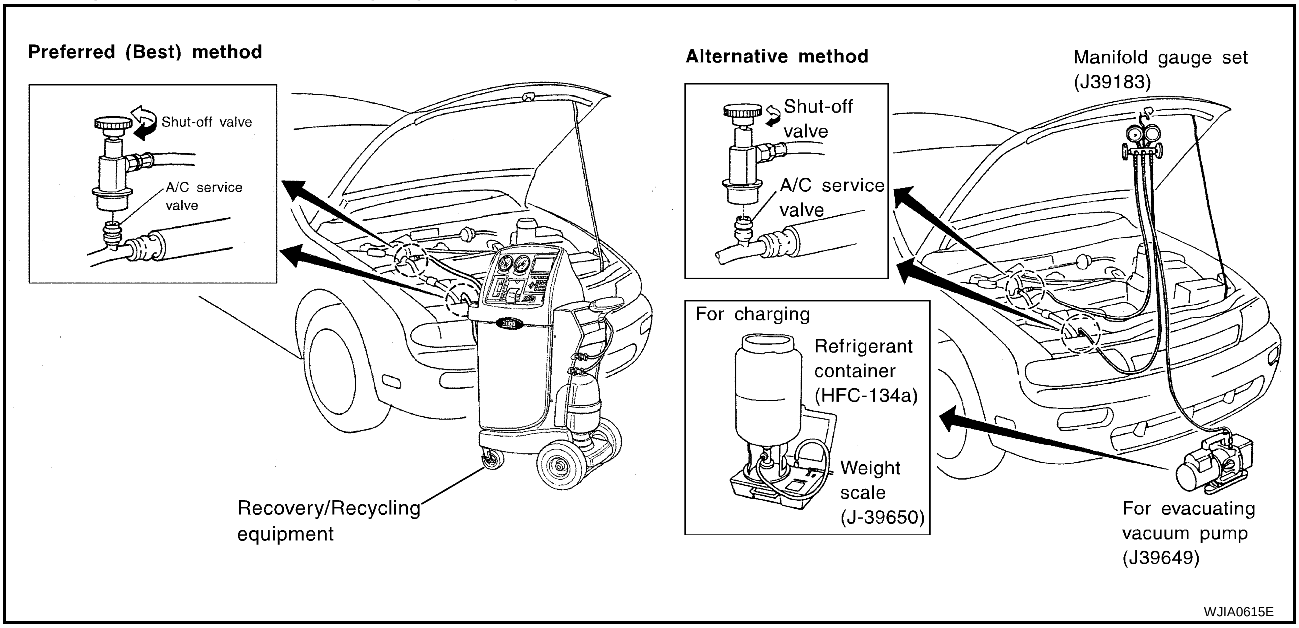

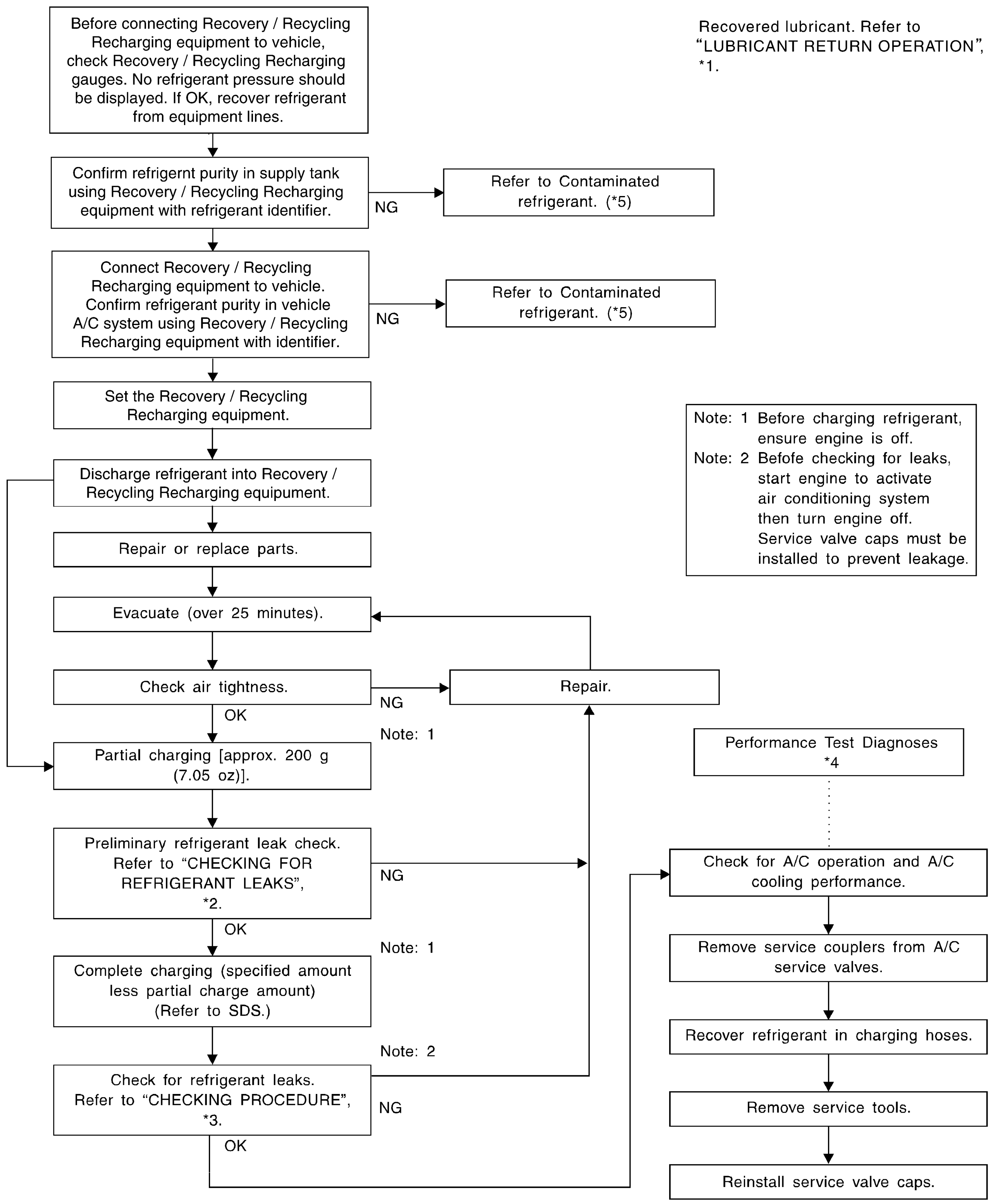

RJIA3006E

*1 MTC-22, "LUBRICANT RETURN OPERATION"
*2 MTC-90, "Checking for Refrigerant Leaks"
*3 MTC-92, "CHECKING PROCEDURE"
*4 MTC-53, "PERFORMANCE TEST DIAGNOSIS"
*5 MTC-5, "CONTAMINATED REFRIGERANT"

Components

AJS001NG

Refer to MTC-6, "Precautions for Refrigerant Connection" .

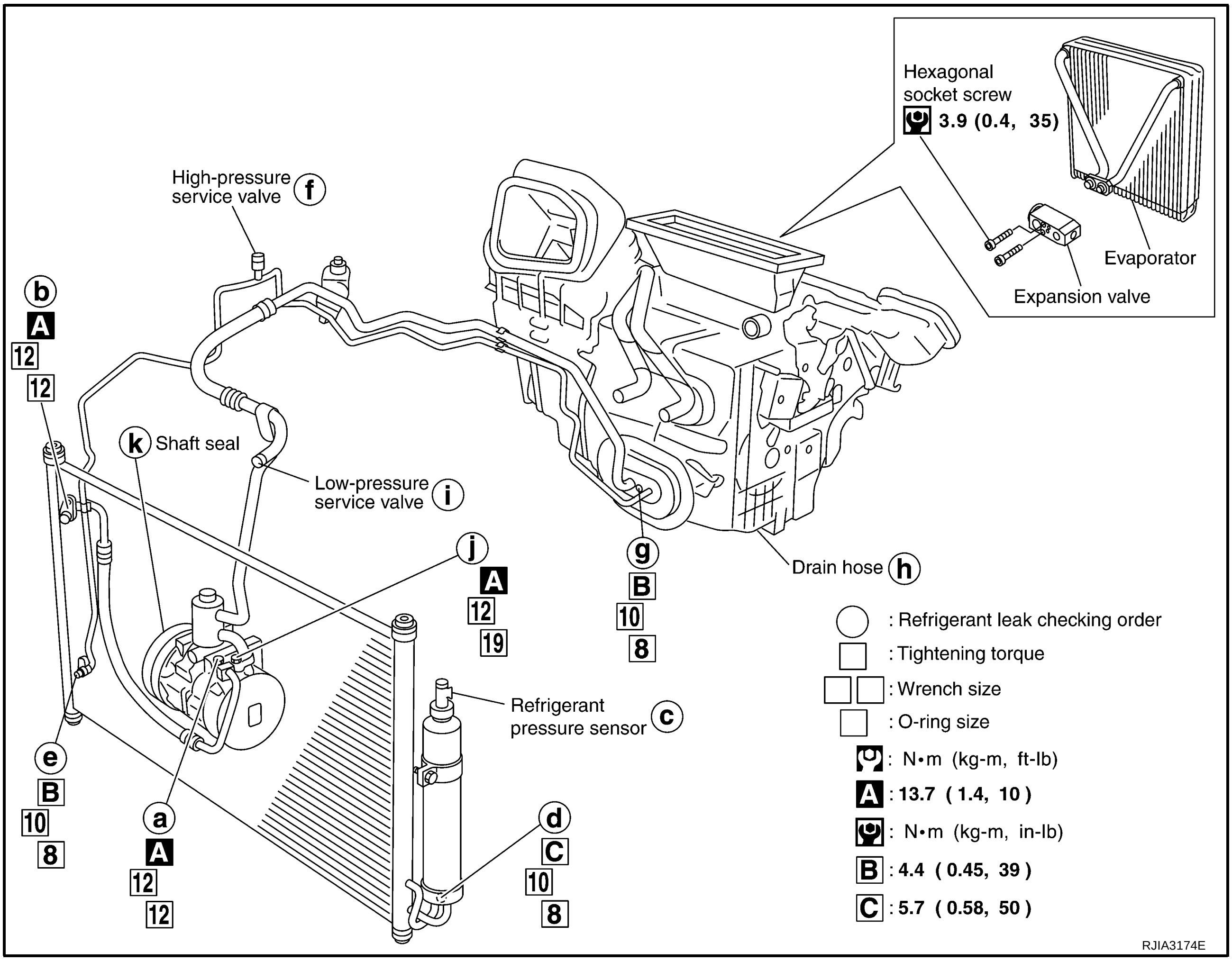

Removal and Installation of Compressor

AJS001NH

REMOVAL

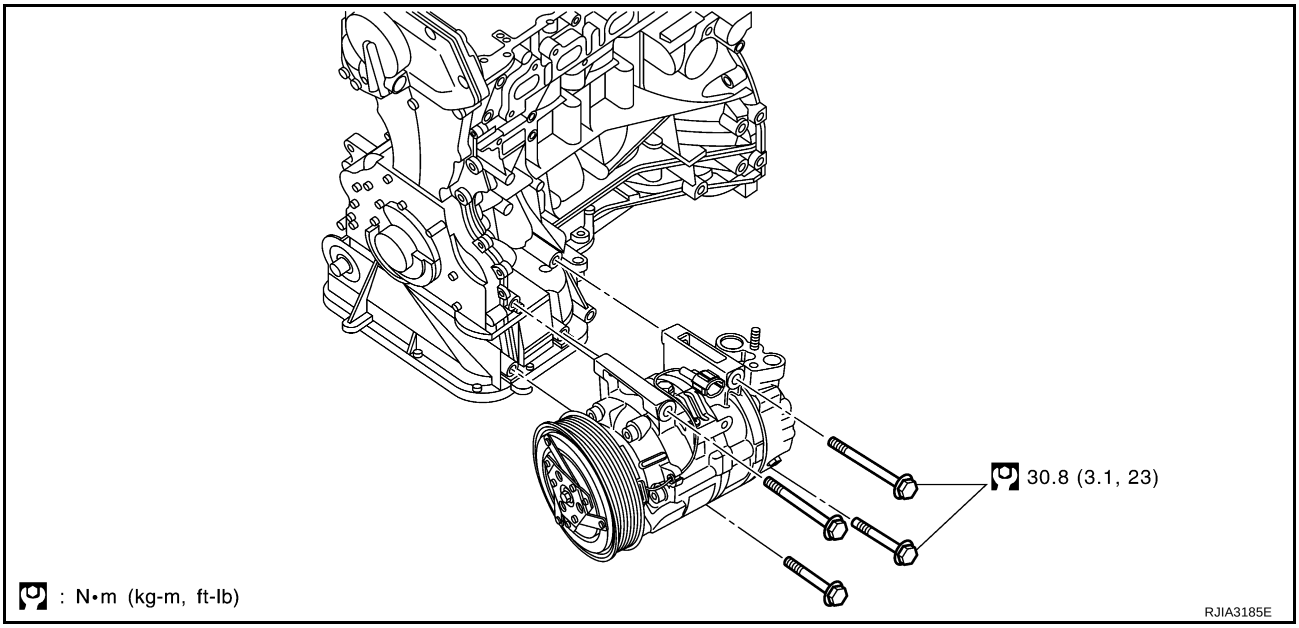

1. Use a refrigerant collecting equipment (for HFC-134a) to discharge the refrigerant.
2. Remove engine undercover, using power tools.

3. Remove compressor-alternator belt. Refer to EM-11, "Removal and Installation" or EM-12, "Removal and Installation of Drive Belt Auto-Tensioner" .
4. Remove mounting bolt from high-pressure flexible hose.
5. Remove mounting nut from low-pressure flexible hose.

   CAUTION:
   Cap or wrap the joint of the pipe with suitable material such as vinyl tape to avoid the entry of air.

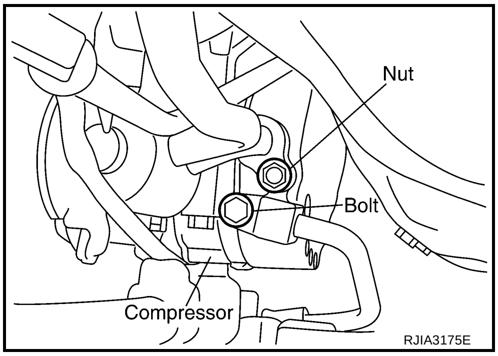

6. Disconnect compressor connector.
7. Remove mounting bolts from compressor.
8. Remove compressor from the lower side of the vehicle.

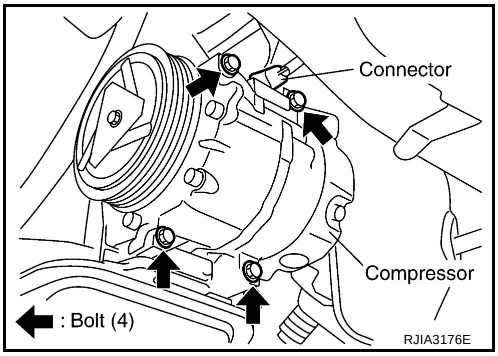

INSTALLATION

Installation is basically the reverse order of removal.

CAUTION:

- **Replace O-rings of low-pressure flexible hose and high-pressure flexible hose with new ones, and then apply compressor oil to it when installing it.**
- **When recharging refrigerant, check for leaks.**

Removal and Installation of Compressor Clutch

AJS001OJ

REMOVAL

Overhaul

1. When removing center bolt, hold clutch disc with clutch disc wrench (SST).

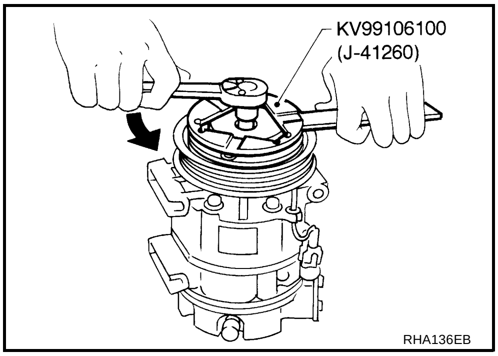

RHA136EB

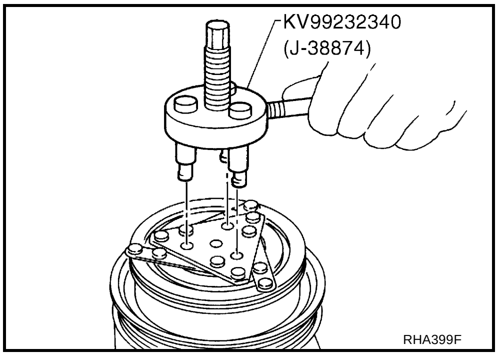

RHA399F

2. Remove clutch disc using clutch disc puller (SST).

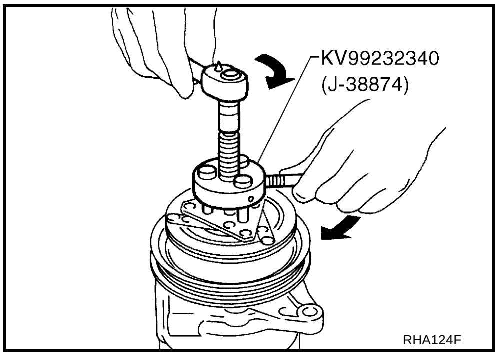

RHA124F

3. Remove snap ring using external snap ring pliers.

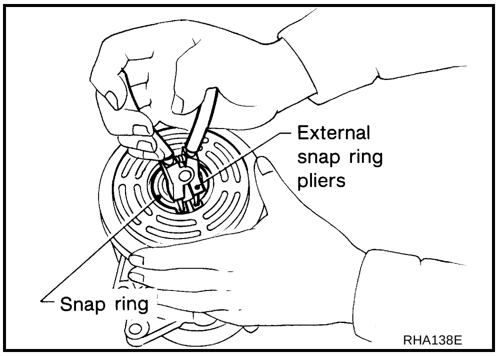

RHA138E

4. Position the center pulley puller on the end of the drive shaft, and remove pulley assembly using any commercially available pulley puller.
   To prevent the pulley groove from being deformed, the puller claws should be positioned into the edge of the pulley assembly.

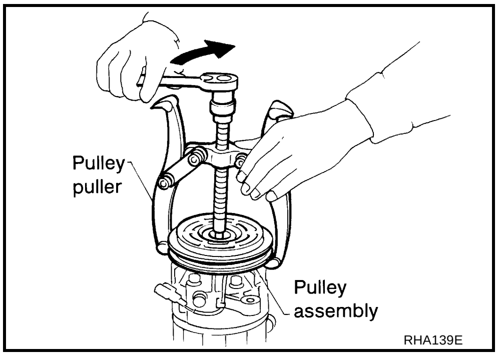

5. Remove field coil harness clip using a pair of pliers.

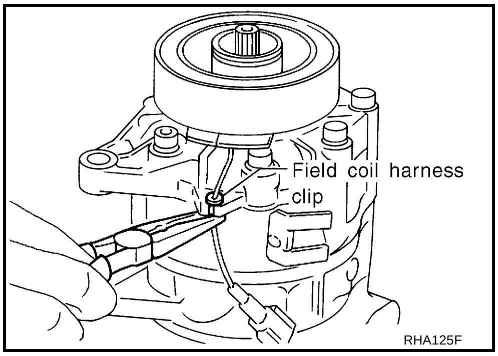

6. Remove snap ring using external snap ring pliers.

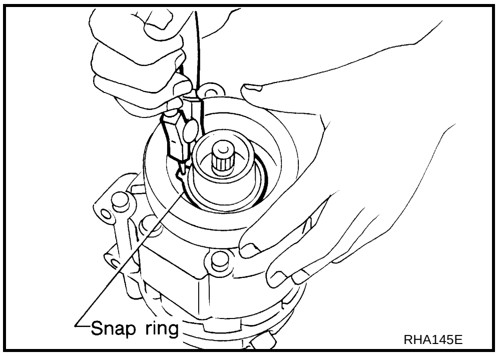

Inspection

Clutch disc
If the contact surface shows signs of damage due to excessive heat, replace clutch disc and pulley.

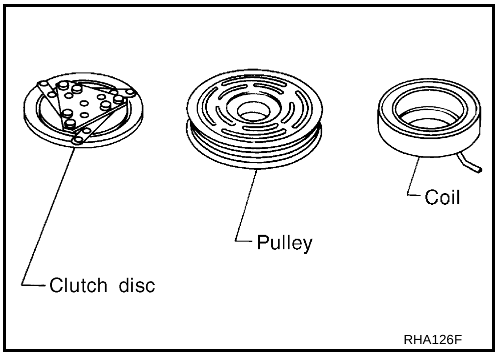

Pulley
Check the appearance of the pulley assembly. If the contact surface of pulley shows signs of excessive grooving, replace clutch disc and pulley. The contact surfaces of the pulley assembly should be cleaned with a suitable solvent before reinstallation.

Coil
Check coil for loose connection or cracked insulation.

INSTALLATION

1. Install field coil.
   Be sure to align the coil's pin with the hole in the compressor's front head.
2. Install field coil harness clip using a screwdriver.

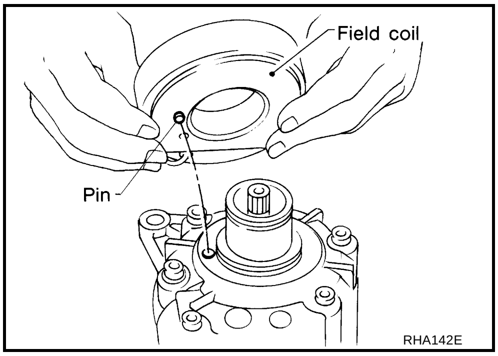

3. Install pulley assembly using pulley installer (SST) and a hand press, and then install snap ring using snap ring pliers.

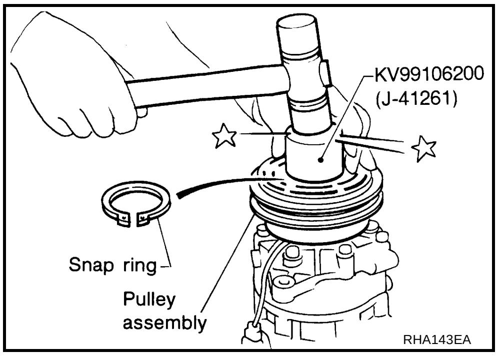

4. Install clutch disc on drive shaft, together with original shim(s). Press the clutch disc down by hand.

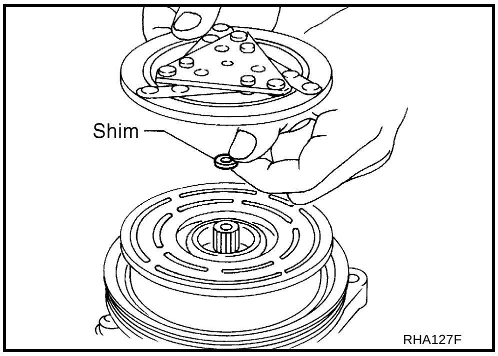

5. Using the holder to prevent clutch disc rotation.

   : 14 N·m (1.4 kg-m, 10 ft-lb)

   After tightening the bolt, check that the pulley rotates smoothly.

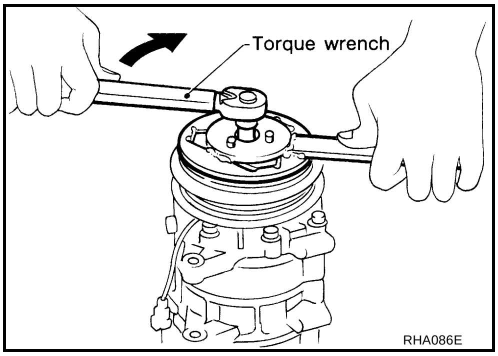

6. Check clearance around the entire periphery of clutch disc.

   Disc to pulley clearance : 0.3 - 0.6 mm (0.012 - 0.024 in)

   If the specified clearance is not obtained, replace adjusting spacer and readjust.

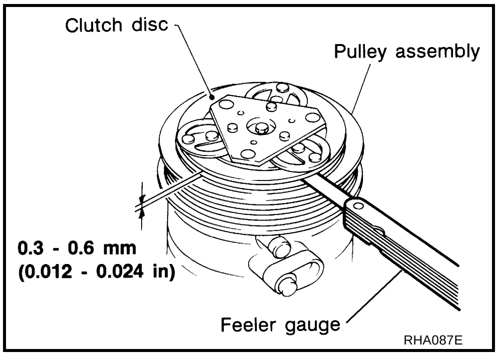

Break-In Operation

When replacing compressor clutch assembly, always carry out the break-in operation. This is done by engaging and disengaging the clutch about thirty-times. Break-in operation raises the level of transmitted torque.

Removal and Installation of Low-Pressure Flexible Hose

AJS001NJ

REMOVAL

1. Use a refrigerant collecting equipment (for HFC-134a) to discharge the refrigerant.
2. Remove extension cowl top panel.
3. Remove the clips from low-pressure flexible hose.
4. Remove mounting bolts from low-pressure flexible hose bracket.
5. Remove harness bracket mounting bolt.

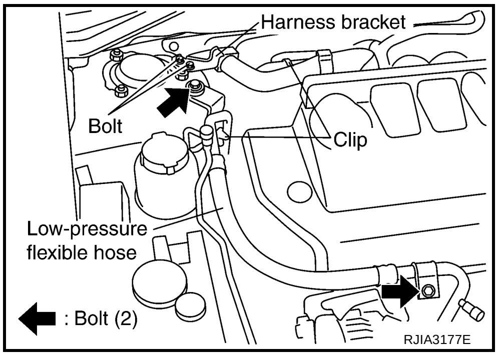

6. Remove mounting nut from low-pressure flexible hose.

   CAUTION:

   Cap or wrap the joint of the pipe with suitable material such as vinyl tape to avoid the entry of air.

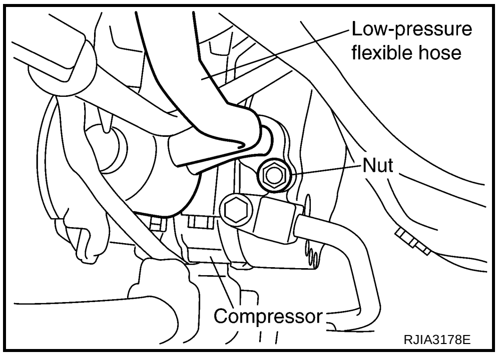

7. Remove mounting bolt, and then remove low-pressure flexible hose.

   CAUTION:

   Cap or wrap the joint of the pipe with suitable material such as vinyl tape to avoid the entry of air.

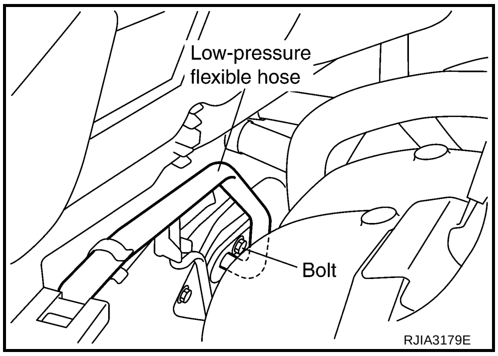

INSTALLATION

Installation is basically the reverse order of removal.

CAUTION:
- **Replace O-rings of low-pressure flexible hose with new ones, and then apply compressor oil to it when installing it.**
- **When recharging refrigerant, check for leaks.**

Removal and Installation of High-Pressure Flexible Hose

AJS001NK

REMOVAL

1. Use a refrigerant collecting equipment (for HFC-134a) to discharge the refrigerant.
2. Remove high-pressure flexible hose mounting clip.

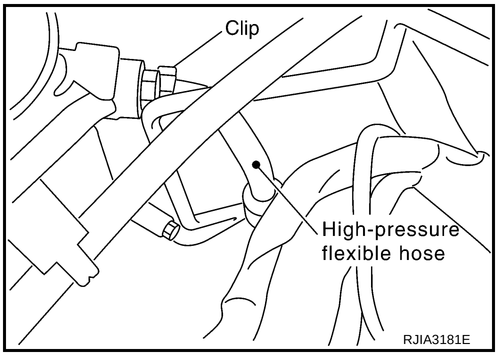

3. Remove mounting bolt from high-pressure flexible hose, and then remove it.

   CAUTION:
   Cap or wrap the joint of the pipe with suitable material such as vinyl tape to avoid the entry of air.

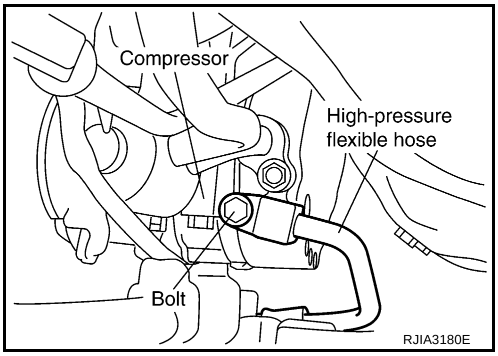

INSTALLATION

Installation is basically the reverse order of removal.

CAUTION:
- **Replace O-rings of high-pressure flexible hose with new ones, and then apply compressor oil to it when installing it.**
- **When recharging refrigerant, check for leaks.**

Removal and Installation of High-Pressure Pipe

AJS001NL

REMOVAL

1. Use a refrigerant collecting equipment (for HFC-134a) to discharge the refrigerant.
2. Remove low-pressure flexible hose. Refer to MTC-85, "Removal and Installation of Low-Pressure Flexible Hose" .
3. Remove high-pressure pipe from clip.

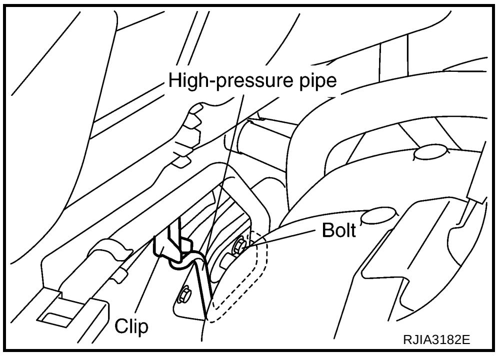

4. Remove mounting bolt from high-pressure pipe.

   CAUTION:

   Cap or wrap the joint of the pipe with suitable material such as vinyl tape to avoid the entry of air.

5. Remove high-pressure pipe.

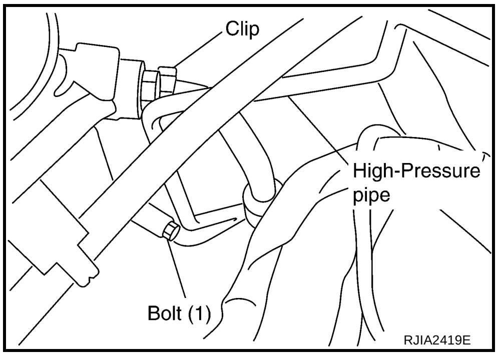

INSTALLATION

Installation is basically the reverse order of removal.

CAUTION:

- **Replace O-rings of high-pressure pipe with new ones, and then apply compressor oil to it when installing it.**
- **When recharging refrigerant, check for leaks.**

Removal and Installation of Condenser

AJS001NM

REMOVAL

1. Use a refrigerant collecting equipment (for HFC-134a) to discharge the refrigerant.
2. Disconnect high-pressure flexible hose and high-pressure pipe from the condenser.

   CAUTION:

   Cap or wrap the joint of the pipe with suitable material such as vinyl tape to avoid the entry of air.

3. Remove air duct (inlet). Refer to EM-14, "AIR CLEANER AND AIR DUCT" .
4. Remove battery and battery tray. Refer to SC-4, "BATTERY" .

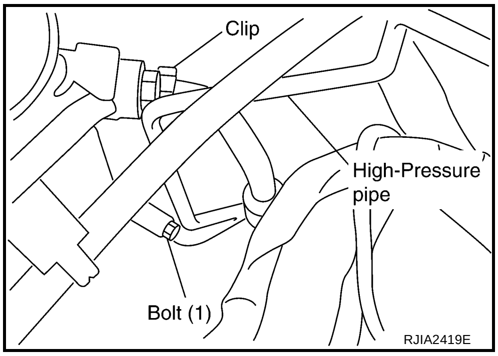

5. Disconnect refrigerant pressure sensor connector.

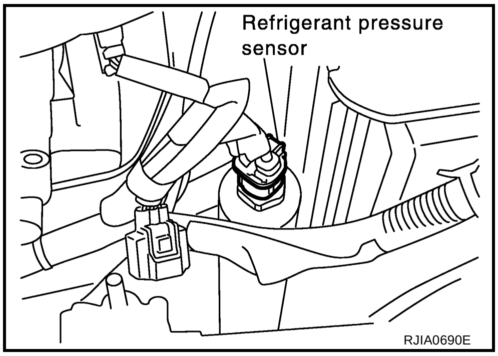

6. Remove front grille and radiator mounting bracket. Refer to EI-18, "FRONT GRILLE" and CO-11, "RADIATOR" .
7. Remove mounting nuts from condenser.
8. Remove radiator from lower mount, move it to engine side, and then remove condenser between radiator and radiator core support.

   CAUTION:

   Be careful not to damage the core surface of condenser and radiator.

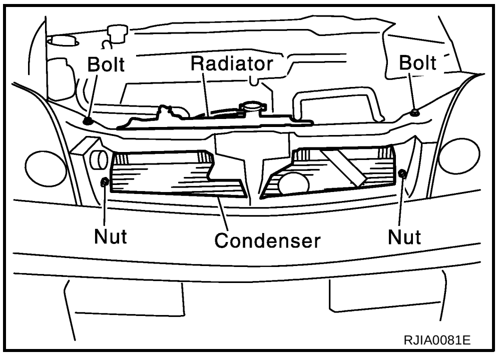

A
B
C
D
E
F
G
H
I
MTC
K
L
M

INSTALLATION

Installation is basically the reverse order of removal.

CAUTION:

- **Replace O-rings of high-pressure pipe and high-pressure flexible hose with new ones, and then apply compressor oil to them after installing them.**
- **When recharging refrigerant, check for leaks.**

Condenser mounting nuts

: 4.2 N·m (0.43 kg-m, 37 in-lb)

Removal and Installation of Liquid Tank

AJS001NN

REMOVAL

1. Remove condenser. Refer to MTC-87, "Removal and Installation of Condenser" .
2. Clean liquid tank and its surrounding area, and remove dirt and rust from liquid tank.
   CAUTION:
   Be sure to clean carefully.
3. Remove mounting bolts from liquid tank.
   CAUTION:
   Cap or wrap the joint of condenser pipe with a suitable material such as a vinyl tape to avoid the entry of air.

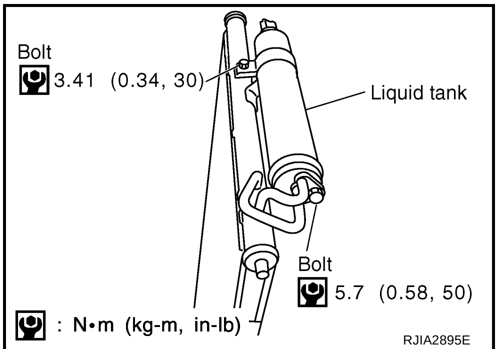

RJIA2895E

4. Lift liquid tank brecket upward. Remove bracket from protruding part of condenser.
5. Slide liquid tank upward, and then remove liquid tank.

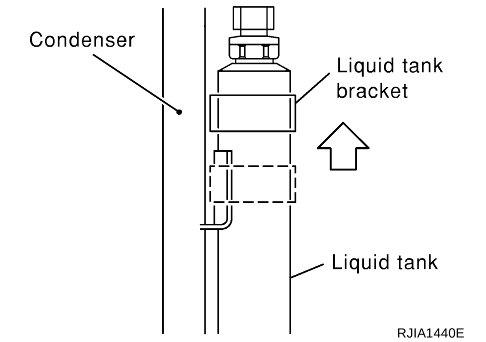

RJIA1440E

INSTALLATION

Install liquid tank, and then install liquid tank bracket on condenser.

CAUTION:

- **Make sure liquid tank bracket is securely installed at protrusion of condenser. (Make sure liquid tank bracket does not move to position below center of liquid tank.)**
- **Replace O-rings of the condenser pipe with new ones, and then apply compressor oil to them when installing them.**
- **When recharging refrigerant, check for leaks.**

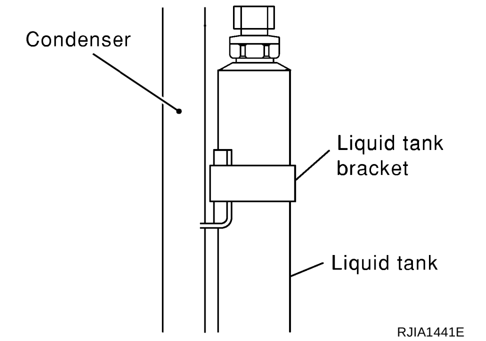

RJIA1441E

Removal and Installation for Refrigerant Pressure Sensor

AJS001NO

REMOVAL

1. Use a refrigerant collecting equipment (for HFC-134a) to discharge the refrigerant.
2. Remove liquid tank. Refer to MTC-88, "Removal and Installation of Liquid Tank" .
3. Using a vise, secure liquid tank, and remove refrigerant pressure sensor.

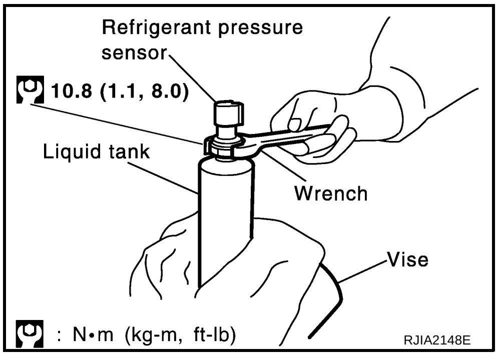

INSTALLATION

Installation is basically the reverse order of removal.

CAUTION:

- **Apply compressor oil to O-ring of refrigerant pressure sensor when installing it.**
- **When recharging refrigerant, check for leaks.**

Removal and Installation of Evaporator

AJS001NQ

REMOVAL

1. Use a refrigerant collecting equipment (for HFC-134a) to discharge the refrigerant.
2. Remove extension cowl top panel.
3. Disconnect low-pressure flexible hose and high-pressure pipe from evaporator.

   CAUTION:
   Cap or wrap the joint of low-pressure flexible hose and high-pressure pipe with a suitable material such as a vinyl tape to avoid the entry of air.

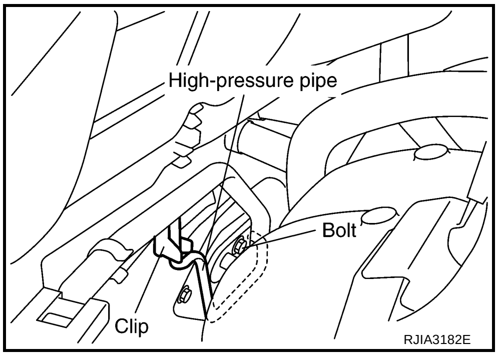

4. Remove mounting screw, and then remove expansion valve cover.
5. Remove mounting bolts, and then remove expansion valve.
6. Remove blower unit. Refer to MTC-62, "BLOWER UNIT" .

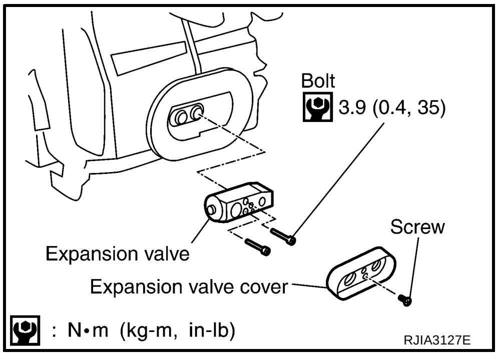

7. Remove foot duct (passenger side).
8. Remove mounting screws, and then remove evaporator cover.
9. Slide evaporator, and then remove it from heater & cooling unit assembly.

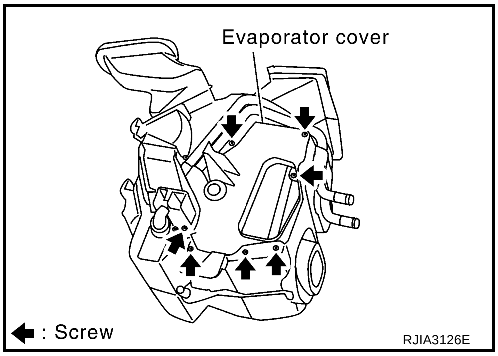

INSTALLATION

Installation is basically the reverse order of removal.

CAUTION:

- **Replace O-rings of low-pressure flexible hose and high-pressure pipe with new ones, and then apply compressor oil to them when installing them.**
- **When recharging refrigerant, check for leaks.**

Removal and Installation of Expansion Valve

AJS001OD

REMOVAL

1. Use a refrigerant collecting equipment (for HFC-134a) to discharge the refrigerant.
2. Remove extension cowl top panel.
3. Disconnect low-pressure flexible hose and high-pressure pipe from evaporator.

   CAUTION:

   Cap or wrap the joint of low-pressure flexible hose and high-pressure pipe with a suitable material such as a vinyl tape to avoid the entry of air.
4. Remove mounting screw, and then remove expansion valve cover.
5. Remove mounting bolts, and then remove expansion valve.

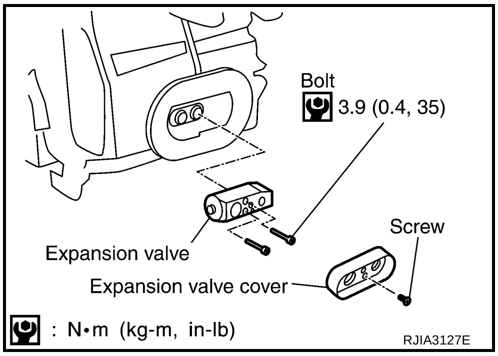

INSTALLATION

Installation is basically the reverse order of removal.

CAUTION:

- **Replace O-rings of expansion valve and piping with new ones, and then apply compressor oil to them when installing them.**
- **When recharging refrigerant, check for leaks.**

Checking for Refrigerant Leaks

AJS001NS

Perform a visual inspection of all refrigeration parts, fittings, hoses and components for signs of A/C lubricant leakage, damage and corrosion. A/C lubricant leakage may indicate an area of refrigerant leakage. Allow extra inspection time in these areas when using either an electronic refrigerant leak detector or fluorescent dye leak detector (SST: J-42220).

If dye is observed, confirm the leak with an electronic refrigerant leak detector. It is possible a prior leak was repaired and not properly cleaned.

When searching for leaks, do not stop when one leak is found but continue to check for additional leaks at all system components and connections.

When searching for refrigerant leaks using an electronic leak detector, move the probe along the suspected leak area at 1 to 2 inches per second and no further than 1/4 inch from the component.

CAUTION:
Moving the electronic leak detector probe slower and closer to the suspected leak area will improve the chances of finding a leak.

Checking System for Leaks Using the Fluorescent Leak Detector

AJS001NT

1. Check A/C system for leaks using the UV lamp and safety goggles (SST: J-42220) in a low sunlight area (area without windows preferable). Illuminate all components, fittings and lines. The dye will appear as a bright green/yellow area at the point of leakage. Fluorescent dye observed at the evaporator drain opening indicates an evaporator core assembly (tubes, core or expansion valve) leak.
2. If the suspected area is difficult to see, use an adjustable mirror or wipe the area with a clean shop rag or cloth, with the UV lamp for dye residue.
3. After the leak is repaired, remove any residual dye using dye cleaner (SST: J-43872) to prevent future misdiagnosis.
4. Perform a system performance check and verify the leak repair with an approved electronic refrigerant leak detector.

NOTE:
Other gases in the work area or substances on the A/C components, for example, anti-freeze, windshield washer fluid, solvents and lubricants, may falsely trigger the leak detector. Make sure the surfaces to be checked are clean.
Clean with a dry cloth or blow off with shop air.
Do not allow the sensor tip of the detector to contact with any substance. This can also cause false readings and may damage the detector.

Dye Injection

AJS001NU

(This procedure is only necessary when recharging the system or when the compressor has seized and was replaced.)

1. Check A/C system static (at rest) pressure. Pressure must be at least 345 kPa (3.52 kg/cm^2 , 50 psi).
2. Pour one bottle (1/4 ounce / 7.4 cc) of the A/C refrigerant dye into the injector tool (SST: J-41459).
3. Connect the injector tool to the A/C Low-pressure side service fitting.
4. Start engine and switch A/C ON.
5. When the A/C operating (compressor running), inject one bottle (1/4 ounce / 7.4 cc) of fluorescent dye through the low-pressure service valve using dye injector tool (SST: J-41459) (refer to the manufacture’s operating instructions).
6. With the engine still running, disconnect the injector tool from the service fitting.

   CAUTION:
   Be careful the A/C system or replacing a component, pour the dye directly into the open system connection and proceed with the service procedures.
7. Operate the A/C system for a minimum of 20 minutes to mix the dye with the system oil. Depending on the leak size, operating conditions and location of the leak, it may take from minutes to days for the dye to penetrate a leak and become visible.

Electronic Refrigerant Leak Detector

AJS001NV

PRECAUTIONS FOR HANDLING LEAK DETECTOR

When performing a refrigerant leak check, use an A/C electrical leak detector (SST: J-41995) or equivalent. Ensure that the instrument is calibrated and set properly per the operating instructions.
The leak detector is a delicate device. In order to use the leak detector properly, read the operating instructions and perform any specified maintenance.

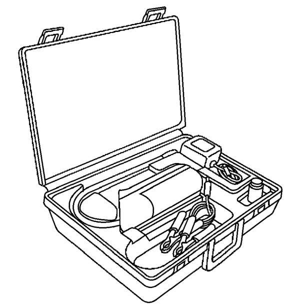

J-41995 (A/C leak detector)

SHA196FA

A B C D E F G H I MTC K L M

1. Position probe approximately 5 mm (3/16 in) away from point to be checked.

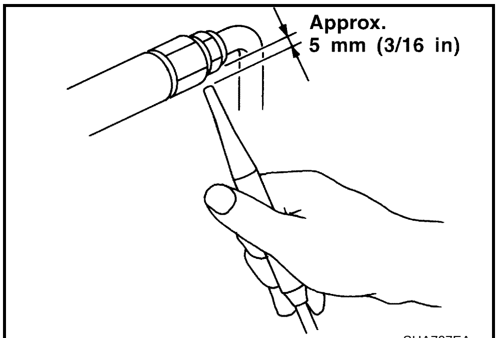

SHA707EA

2. When testing, circle each fitting completely with probe.

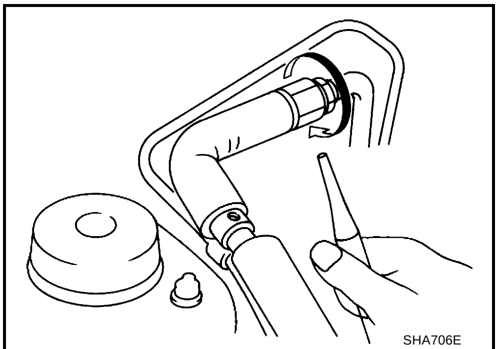
SHA706E

3. Move probe along component approximately 25 to 50 mm (1 to 2 in)/sec.

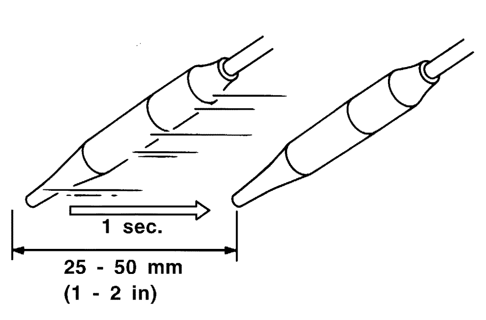

SHA708EA

CHECKING PROCEDURE

To prevent inaccurate or false readings, make sure there is no refrigerant vapor, shop chemicals, or cigarette smoke in the vicinity of the vehicle. Perform the leak test in calm area (low air/wind movement) so that the leaking refrigerant is not dispersed.

1. Stop engine.
2. Connect a suitable A/C manifold gauge set (SST: J-39183) to the A/C service valves.
3. Check if the A/C refrigerant pressure is at least 345 kPa (3.52 kg/cm^2 , 50 psi) above 16°C (61°F). If less than specification, recover/evacuate and recharge the system with the specified amount of refrigerant.

   NOTE:
   At temperatures below 16°C (61°F), leaks may not be detected since the system may not reach 345 kPa (3.52 kg/cm^2 , 50 psi).
4. Perform the leak test from the high-pressure side (compressor discharge a to evaporator inlet g) to the low-pressure side (evaporator drain hose h to shaft seal k). Refer to MTC-80, "Components" . Perform a leak check for the following areas carefully. Clean the component to be checked and move the leak detected probe completely around the connection/component.

   Compressor
   Check the fitting of high- and low-pressure hoses, relief valve and shaft seal.

   Condenser
   Check the fitting of high-pressure hose and pipe.

Liquid tank
Check the refrigerant pressure sensor.

Service valves
Check all around the service valves. Ensure service valve caps are secured on the service valves (to prevent leaks).

NOTE:
After removing A/C manifold gauge set from service valves, wipe any residue from valves to prevent any false readings by leak detector.
Cooling unit (Evaporator)
With engine OFF, turn blower fan on “High” for at least 15 seconds to dissipate any refrigerant trace in the cooling unit. Wait a minimum of 10 minutes accumulation time (refer to the manufacturer’s recommended procedure for actual wait time) before inserting the leak detector probe into the drain hose.
Keep the probe inserted for at least 10 seconds. Use caution not to contaminate the probe tip with water or dirt that may be in the drain hose.

5. If a leak detector detects a leak, verify at least once by blowing compressed air into area of suspected leak, then repeat check as outlined above.
6. Do not stop when one leak is found. Continue to check for additional leaks at all system components.
   If no leaks are found, perform steps 7 - 10.
7. Start engine.
8. Set the heater A/C control as follows;
   a. A/C switch: ON
   b. Mode control dial: VENT (ventilation)
   c. Intake door position: Recirculation
   d. Temperature control dial: Max. cool
   e. Fan speed: High
9. Run engine at 1,500 rpm for at least 2 minutes.
10. Stop engine and perform leak check again following steps 4 through 6 above.
    Refrigerant leaks should be checked immediately after stopping the engine. Begin with the leak detector at the compressor. The pressure on the high-pressure side will gradually drop after refrigerant circulation stops and pressure on the low-pressure side will gradually rise, as shown in the graph. Some leaks are more easily detected when pressure is high.

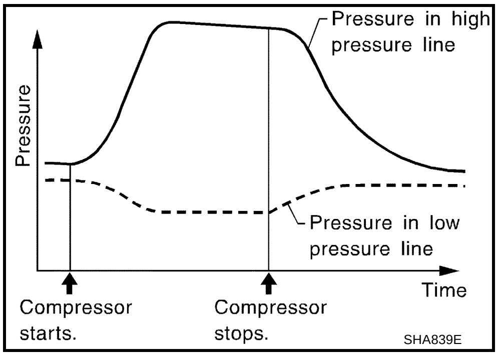

11. Before connecting recovery/recycling recharging equipment to vehicle, check recovery/recycling recharging equipment gauges. No refrigerant pressure should be displayed. If pressure is displayed, recover refrigerant from equipment lines and then check refrigerant purity.
12. Confirm refrigerant purity in supply tank using recovery/recycling recharging equipment and refrigerant identifier.
13. Confirm refrigerant purity in vehicle A/C system using recovery/recycling recharging equipment and refrigerant identifier.
14. Discharge A/C system using approved refrigerant recovery equipment. Repair the leaking fitting or component as necessary.
15. Evacuate and recharge A/C system and perform the leak test to confirm no refrigerant leaks.
16. Conduct A/C performance test to ensure system works properly.

SERVICE DATA AND SPECIFICATIONS (SDS)

PFP:00030

Compressor

AJS001NW

Model		Calsonic Kansei make CWV-615M
Type		V-6 variable displacement
Displacement cm^3 (cu in)/rev	Max.	146 (8.91)
	Min.	13.5 (0.824)
Cylinder bore × stroke mm (in)		35.2 (1.386) × [2.3 - 25.0 (0.091 - 0.984)]
Direction of rotation		Clockwise (viewed from drive end)
Drive belt		Poly V

Lubricant

AJS001NX

Model		Calsonic Kansei make CWV-615M
Name		Nissan A/C System Oil Type S (DH-PS)
Part number		KLH00-PAGS0
Capacity m ℓ (Imp fl oz)	Total in system	180 (6.3)
	Compressor (Service part) charging amount	180 (6.3)

Refrigerant

AJS001NY

Type	HFC-134a (R-134a)
Capacity kg (lb)	0.55 (1.21)

Engine Idling Speed

AJS001NZ

Refer to EC-75, "Idle Speed and Ignition Timing Check" .

Belt Tension

AJS001O0

Refer to EM-11, "DRIVE BELTS" .